Crathco® Beverage Freezers

Operation and Instruction Manual
for
Models 5311, 5511, 5941, & 5711

Table of Contents

Warnings and Safety Precautions.....3
Installation 4-6
Operating and Adjustments 6-11
Care and Cleaning 12-17
Maintenance Service 17-21
Troubleshooting 22-23
Exploded Views.....24-40
Electrical Diagrams 41-52
Wiring Diagrams 53-67
Refrigeration Diagrams.....68-69

Prior authorization must be obtained from Grindmaster-Cecilware™ for all warranty claims.

Model 5311

Grindmaster-Cecilware™
4003 Collins Lane
Louisville, KY 40245 USA
(502) 425-4776
(800) 695-4500 (USA & Canada only)
FAX (502) 425-4664
www.gmcw.com

© Grindmaster-Cecilware, 2011
PRINTED IN USA

1011 Form# WH-335-01
Part# W0600400

WARNING LABELS

OPERATOR'S SAFETY PRECAUTIONS

1) Read and understand the operating instructions in this manual thoroughly.
2) Note all warning labels on the freezer. If any of the warning labels are missing or damaged replace them immediately.
3) Do not wear loose fitting garments or jewelry which could cause a serious accident.
4) Stay alert at all times during operation.
5) Keep operating area clean.
6) Do not operate freezer if any excessive noise or vibration occurs. Contact your authorized service agent.

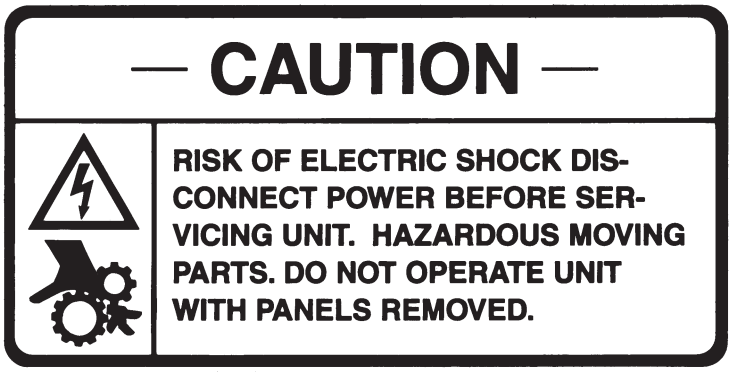

Located on the right, left and rear panels.

INSTALLATION

Shipment Transit

1) The freezer has been operated and tested at the factory. Upon arrival the complete freezer must be thoroughly checked for any damage which may have occurred in transit. ***Note:*** *A tip (N) Tell warning device is placed on each shipping carton at the factory. If the arrow tip is blue, the carton has been tipped in transit.* (See Figure A)

2) **THE CARRIER IS RESPONSIBLE FOR ALL DAMAGE IN TRANSIT WHETHER VISIBLE OR CONCEALED. DO NOT PAY THE FREIGHT BILL** until the freezer has been checked for damage. Have the carrier note any visible damage on the freight bill. If concealed damage and/or shortages are found later, advise the carrier within 10 days and request inspection. The customer must place any claim for damage and/or shortage with the carrier. Grindmaster Corporation cannot make any claims against the carrier.

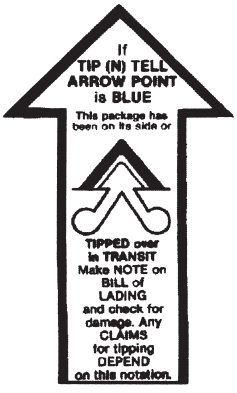

Figure A

Removal from Carton and Pallet

1) Remove staples or cut cardboard box around the stapled area.

2) Pull the cardboard box up off machine.

3) Remove the Styrofoam packing and the plastic bag.

4) Remove both side panels with screwdriver.

5) Use a wratchet with a 3 inch extension and a 7/16 socket to remove the shipping bolts (connecting the machine to the pallet) located on both sides of the frame bottom plate.

6) Supporting all four sides, lift machine up and place in appropriate area.

⚠ **CAUTION: If equipped with spinner do not lift unit by spinner shaft to avoid serious damage to spinner.**

Installing Your Unit

⚠ **CAUTION: Do not alter or deform the plug in any way! Altering or deforming plug may damage unit and will void warranty! Receptacle required: NEMA 5-15R for model 5941, NEMA 5-20R for model 5311, and NEMA 6-20R for models 5511 and 5711.**

1) Place freezer in a location that allows adequate space at each side and above for proper air circulation. Minimum clearance is: 6” (15 cm) on both sides 0” at back and open above the freezer. (*See Figure B)*

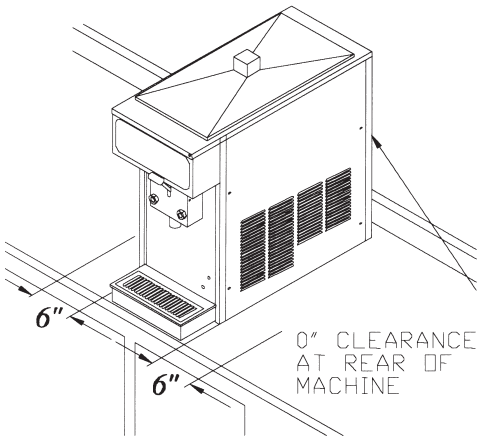

Figure B

⚠ **CAUTION: Failure to allow adequate ventilation will void the warranty and reduce freezer performance.**

2) Place the freezer on the self-sealing rubber pad on a level counter that is stable and strong enough to safely support its weight (200lbs.) (90.7kg), or if equipped with legs instead of pad, install legs by screwing them into the four leg holes on the bottom of the unit. (Leg Kit Part #W089.0220 (4) 4” Legs)

3) Place On-Off-Clean switch in OFF position.

4) Install header by removing two screws from the electrical box cover. Carefully remove electrical box cover. Place the header (transparency) between the clear and opaque plates (plastic lens). Slip the electrical box cover back on to machine and reinsert the four screws. (*See Figure C)*

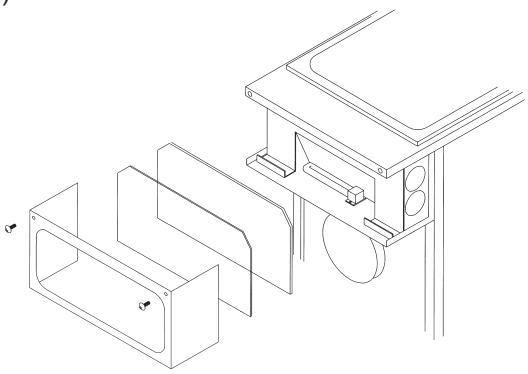

Figure C

5) Install the standard one piece carb tube by placing it in the hole in the hopper. If your unit is equipped with a two piece smoothie/shake carb tube place the solid piece in the hole in the hopper with the hole facing front to back. Then place the carb tube sleeve over the solid piece, lining up one of the holes with the hole in the solid piece. (Select the larger hole for thickest products).

6) Connect the power cord to a properly grounded 115V/20 Amp or 208-230V/20 Amp circuit (depending on the voltage of the dispenser).

Installation of Concealed Air Filter Accessory Kit (optional)

(Part #s W089.0200 Stainless Steel, W089.0208 Black)

1) Remove the four screws that hold the right side panel on the machine.

2) Install the filter panel over the existing side panel and reinstall screws. (See Figure D)

3) Open top cover of filter cover by raising and rotating away from the existing panel.

4) Slide filter into top of filter cover with removal clip up and the air flow arrows facing the existing panel. (See Figure E)

5) Push filter down until flush with the top of the cover.

6) Close the top cover by rotating the top back toward the existing cover and pushing down once it is in place.

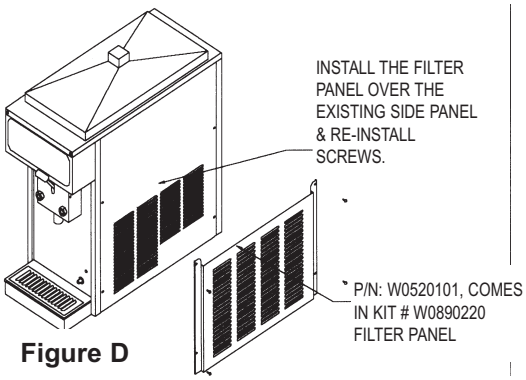

Figure D

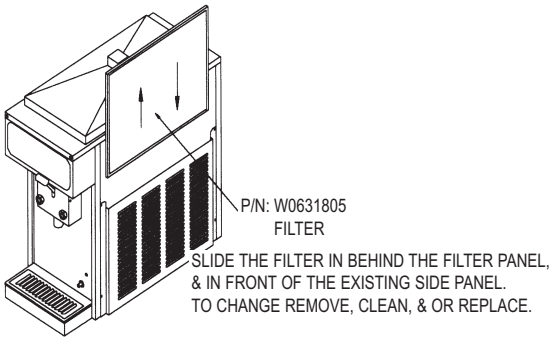

Figure E

Installation of Exposed Filter Accessory Kit (optional)

(Part #W089.0206)

1) Remove the four panel screws.

2) Pull the bottom of the panel out.

3) Run a bead of the silicone adhesive at the inside back of the bottom filter channel. (2)

4) Install the channel over the end of the side panel so the adhesive in the channel contacts the bottom edge of the side panel.

5) Put the panel with the channel added, back in place on the machine and reinstall the two lower panel screws.

6) Apply silicone adhesive to the length of the top edge of the upper filter channel (1) before installing, then wipe off any excess.

7) Install the upper channel using the upper panel screws.

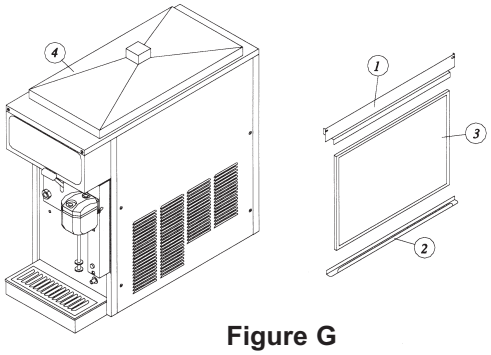

Figure G

8) Slide filter (3) in from the front with the arrows pointing toward the existing panel. The thick wire side of the filter should face outward.

Installation of Spinner/Mixer Accessory Kit (optional) (Part #W089.0053-115V) (Part # W0890124-220V)

1) Turn to "off" and unplug the freezer from the electrical power source.
2) Remove the white plastic plugs covering the threaded holes on the right front panel (facing the freezer).
3) Remove the electrical box cover.
4) Feed the spinner electrical wires through the 7/8” hole in the spinner mounting bracket.
5) Feed these wires up through the 1/4” x 1/2” hole in the right side bottom of the electrical box.
6) Secure the spinner to the front of the freezer with the long 1/4 x 20 screws provided. (See Figure H)
7) Insert the screws through the front of the spinner bracket, then through the spinner rear mounting bracket (making sure that the bracket flange is toward the left facing toward the front of the freezer).
8) See the spinner-wiring diagrams to locate spinner wire connections.

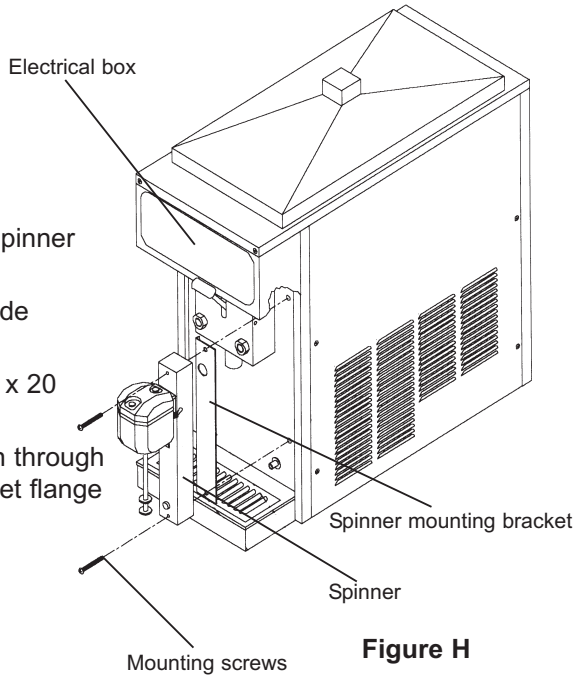

Figure H

OPERATING & ADJUSTMENTS

How to Operate:

1) Sanitize unit following the cleaning instructions on page 12.
2) Fill hopper with product. Allow barrel to fill with product to the proper level, then install carb tube.
3) Turn power switch (toggle switch located underneath the electrical box) to "on" position.
4) Turn mode switch (rocker switch located next to power switch) to freeze position.
5) Allow product to freeze in barrel.
6) To dispense product pull down valve handle and release when done.
7) If product consistency is not as desired, adjust per the instructions on page 9.

Mix Considerations - General

Freezing characteristics are affected by the amount of sweeteners and solids in the mix, called BRIX. BRIX can be measured with an instrument called a refractometer. A BRIX reading of between 11 and 14 will provide optimum freezer operation. Mixes with this brix level will freeze down to a smooth, uniform consistency. Mixes with too high a brix level will take longer to freeze down and will yield a soft, wet, frozen product. Mixes with too low a brix level will have larger ice crystals and will have a tendency to dispense slowly. **Note:** Always take BRIX measurements using mix that has been thoroughly blended, before it is frozen. Always allow frozen mix to thaw thoroughly before taking a reading.

Alcohol content also affects product-freezing characteristics and may prevent the freezer from serving a product at proper thickness.

For maximum output capacity always pre-chill mix before adding it to the freezer. Pre-chilled mix gives the freezer a head start on the freezing process and will speed both initial freeze down and recovery time.

Carburetor Assembly

Your new freezer uses a metering device, known as a carburetor, to feed the proper ratio of mix and air into the freezing cylinder. For products such as dairy based shake mixes, the proper mix to air ratio is generally accepted to be two parts mix to one part air. This proportion yields a finished product that is both tasty and profitable. At this ratio, one gallon of liquid mix will yield a volume of one and one-half gallons of frozen product.

The carburetor is a tube with a hole, or series of holes, bored through the side. It is located in the hopper and fits in a hole that leads to the freezing cylinder. Air flows into the freezing cylinder through the top of the tube and mix flows in through a smaller hole in the side of carburetor tube. The size of the mix inlet is balanced with the viscosity (thickness) of the liquid mix and product draw rate, in such a way that the proper amount of mix is fed into the freezer cylinder to blend with air at just the right ratio. Mix viscosity varies by mix type, mix temperature, and mix age. Different serving rates also demand different feed rates. The Crathco carburetor has an outer sleeve that can be rotated to line up with different hole sizes to provide ideal overrun under all operating conditions.

You will need to experiment to determine how much mix to add to the freezing cylinder at start-up. This can be done by watching the level of mix through the clear plastic dispensing valve when filling the hopper. When the correct amount of mix feeds into the freezing cylinder install the carburetor tube in the "Off" position (outer sleeve set between any two holes) and turn the freezer "ON" to freeze down to proper consistency.

Overrun

Overrun is the increase in product volume, expressed as a percentage, resulting from the entrapment of air in liquid mix as it is frozen.

The rotating dasher blends air into the mix as it is frozen, resulting in increased product volume. For example, if one gallon (4.4 liters) of liquid mix is poured into a freezer and one and a half gallons (6.6 liters) of frozen product is drawn out, the result is a fifty percent volumetric increase, or a fifty (50%) percent “overrun”.

Why is overrun important? The introduction of air into the finished frozen product is essential from two standpoints...taste and profitability. Frozen product with a low percentage of overrun costs more to serve, appears wet, and is heavy. The introduction of air makes the finished frozen product taste richer. Too much air causes the finished product to be too light and fluffy, making it less satisfying and adversely affecting sales. The optimum percentage of overrun varies from one type of mix to another, but 50% overrun is a good average. The ingredients in some mixes take on and hold air easier than others. Overrun also affects profitability. For example, an increase from 25% to 50% overrun represents a mix savings of 17%.

Uniform overruns ensures consistent portion costs. If overrun is allowed to drop, it will cost more to serve a portion of finished product.

Computing Overrun

1) Weigh an empty cup.

2) Weigh this cup filled to the top with liquid mix, and subtract the weight of the cup.

Note: Repeat this step only when changing mix sources, as mix weight will vary slightly from one supplier to another.

Computing Overrun (cont.)

3) Draw a heaping cup of frozen product that contains no air pockets. **Note:** Use a spatula or other device to help fill the cup completely. Avoid tamping the cup as this artificially reduces overrun.

4) Use a straight edge to scrape off excess product flush with the rim of the cup and weigh the cup.

5) Subtract the cup weight and use the overrun formula to determine overrun.

$$\frac{\text{Weight of Liquid Mix (Minus) Weight of Frozen Product}}{\text{Weight of Frozen Product}} \times 100 = \textbf{OVERRUN}$$

For Example:

If a full cup of liquid mix weighs 23 ounces (.652kg) and a full cup of frozen product weighs 15-1/2 ounces (.439kg), then:

$$\frac{23\text{-}15\ 1/2}{15\ 1/2} \times 100 = 48.4\%\ \text{Overrun}$$

Note: Several companies manufacture scales that automatically read out the overrun for one-pint samples. A scale of this type is a valuable tool and should be part of any well run operation. A trick is to place the empty cup on the scale and zero it out first; this will then automatically eliminate the weight of the cup from the calculation.

Overrun has a major impact on the size of the finished frozen portion. As the percentage of overrun (air in the frozen product) increases, the size of the finished portion also increases, yet the portion weight remains the same. For example, an increase from 25% to 50% overrun will yield a 20% larger portion. Customers equate size with perceived value so proper overrun will result in increased customer satisfaction. Experiment with carburetor settings to achieve optimum overrun and product quality with each mix. Some products such as Cappuccino taste better with low overrun. Experiment with different carburetor settings to find the ideal combination for each product.

Use of Stand-By Switch

The "STAND-BY" switch allows the operator to retain optimum product quality and conserve energy during extended non-draw periods. The "Stand-by" mode keeps the mix in the hopper at a safe storage temperature and allows the product in the freezing cylinder to return to a refrigerated liquid state. Switching back to "ON" quickly returns the product in the freezing cylinder to proper serving consistency.

At the start of the "STAND-BY" period:

1) Select the "STAND-BY" mode by moving the mode switch to the middle position. The front panel "STAND-BY" light will illuminate.

At the end of the "STAND-BY" period:

1) Turn the switch to the "FREEZE" position by moving the mode switch. The "FREEZE" light will illuminate.

2) When the freezer cycles off by reaching the desired temperatures you are ready to start serving.

IMPORTANT: ***The STAND-BY SWITCH should not be used in lieu of cleaning and sanitizing procedures specified by local regulatory agencies.***

Mix Low Function

This model will sense when the mix is low in the hopper. The mix low light will illuminate continuously for 2 minutes. After 2 minutes the light will begin to blink off and on for the next 8 minutes. The buzzer in the mix out circuit is 2 minutes off and 5 seconds (or 5 beeps) on for a total of 10 minutes. At the end of the 10-minute time the

Mix Low Function (cont.)

buzzer is out of the circuit and the light will illuminate fully again. After the 10-minute cycle the mix out safety function is activated making the unit inoperable. The machine is placed into the standby mode to prevent any damage to the machine from running dry of product. The unit can be reset back to the freeze mode by simply adding mix into the hopper.

1) If the unit is low in mix or the unit shuts down due to extended mix low condition ("Mix Low" safety function has activated), refill hopper with fresh product. The unit will automatically revert back to its original operation mode.

2) If the mix low safety function has activated disabling the unit, and the product has not been added for an extended period of time - verify the product is okay for re-use. If it is not, use fresh product to restart the unit. Empty the unit of old product and follow sanitizing and start up procedures.

Product Tips

The 5000 Series was designed to dispense a wide variety of frozen beverages including smoothies, frozen cappuccino, shakes and frozen cocktails. These products can be served in consistencies ranging from thin to fairly thick. For optimum long-term freezer reliability, it is recommended that product thickness not be set too thick.

Two types of white plastic dispensing valve plungers are available. One style, part W048.0462, is used to serve these thin to medium products such as cappuccino and cocktails and has one horizontal outlet slot. The other plunger, part W048.0463, is used to serve thicker product such as shakes and smoothies and has two horizontal outlet slots. These plungers are interchangeable.

Over an extended period of time some products, such as frozen cocktails that contain alcohol, have a tendency to separate, or stratify. Separation of product in the mix storage hopper can result in frozen product quality inconsistency. Simply keeping the product stirred on a regular basis will eliminate this problem.

Some of cappuccino or latte' mixes contain dairy products which can spoil if not refrigerated. If the freezer is to be turned off at night these products must be removed from the freezer. ***Contact your local health department regarding its regulations for proper mix handling and storage.***

Product Consistency Adjustment (see Figure I)

1) Remove the front electrical box cover by removing the two screws. (See figure C).

2) If the product in the cylinder has been frozen for more than 30 minutes, draw out 16 ounces (1/2 liter) before checking consistency.

3) Turn the consistency control knob, located at the top center of the circuit board, clockwise to achieve a colder setting or thicker product or counter-clockwise to achieve a less cold setting or less thick product. (See Figure I).

⚠ **CAUTION: This control setting is very sensitive so always make small adjustments. If you visualize this control as a clock face, with the adjuster set all the way counter-clockwise it would be 5:00. A recommended setting is 7:00. This would be the warmest setting the machine has. A one-hour change will make a noticeable difference in product consistency**.

Location of electronic control board

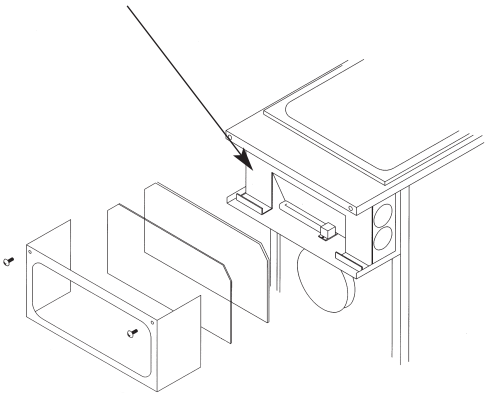

Figure C

Product Consistency Adjustment (cont.)

4) When making adjustments to a thicker (colder) setting, dispense approximately 16 ounces (1/2 liter) of product and recheck consistency after the compressor has cycled off.

5) If the consistency is still not correct, repeat steps 2 and 3.

"Standby" - Freezing Cylinder Temperature Adjustment

1) Remove the front electrical box cover. (See Figure C).

2) For a colder setting, turn the "Barrel" control adjuster, located at the top left of the circuit board, ***counter clockwise.*** (See Figure I).

⚠ **CAUTION: This control setting is very sensitive so always make small adjustments. If you visualize this control as a clock face, a one-hour change will make noticeable difference in freezing cylinder product temperature. A recommended setting is 11:00.**

Hopper Temperature Adjustment

1) Remove the front electrical box cover.

2) For a colder setting, turn the "Hopper" control adjuster, located at the top left of the circuit board, **counter clockwise.** (*See Figure I).*

⚠ **CAUTION: This control setting is very sensitive so always make small adjustments. If you visualize this control as a clock face, a one-hour change will make a noticeable difference in hopper product temperature. A recommended setting is 10:00.**

Note: Some models will have a built in feature (in the freeze mode) that will make the machine inoperable if the mix gets low and is not refilled after ten minutes. (The normal sequence is five beeps every two minutes for a total of ten minutes, then shut down occurs until the unit is refilled). These same units will also have a forty-five second dasher run time after the compressor turns off.

Consistency Control - Overview

⚠ **CAUTION: SHOCK HAZARD**
THIS ADJUSTMENT REQUIRES REMOVAL OF THE ELECTRICAL BOX COVER AND SHOULD BE MADE BY A QUALIFIED SERVICE TECHNICIAN.

The “freeze” mode consistency setting adjusts the frozen product thickness. In the “freeze” mode, as the liquid mix in the cylinder freezes, it becomes harder for the motor to turn the dasher assembly. The control board senses the amount of energy that the drive motor consumes as it rotates the dasher assembly through the product in the cylinder. The control board will turn the compressor and barrel solenoid valve off at the proper consistency. The drive motor will continue to run for 45 seconds after the compressor is cycled off. This is called the blending cycle. After the blending cycle is complete the drive motor also is shut off. The drive motor and compressor will run together at any time refrigeration is required in the barrel. The compressor will run independently for the hopper if required. The hopper is controlled by temperature. The thermistor will signal the board and the board will start the compressor and open the hopper solenoid valve.

The unit will remain off until either the timer in the control board (either 10 or 15 minutes dependent upon which value is selected) restarts the drive motor. In this case the drive motor will run for 45 seconds and if no refrigeration is required the drive motor will then shut off. If refrigeration in the barrel is required the freeze cycle is repeated as well as the blending cycle. The unit will also restart the drive motor if the plunger is raised. The plunger switch will start the drive motor and remain on as long as it is held open. After the plunger is closed, the drive motor will continue to run for 45 seconds. The compressor will start, and barrel solenoid valve will open. If refrigeration is required during this time the freeze cycle and blend cycle will follow.

Consistency Control - Overview (cont.)

In the “standby” mode the control board senses the temperature of the product in the barrel. The drive motor is cycled on time only. It will operate for 2 minutes ON then 18 minutes OFF as long as it is in “standby”. The compressor and drive motor are cycled independently for the barrel in the “standby” mode. Once the barrel thermistor signals to the board, the board will start the compressor and the barrel solenoid valve will open as refrigeration is required. It will continue to run until satisfied. The plunger switch is disabled and the drive motor will not start when the plunger is opened. The hopper is still controlled by temperature. If the thermistor signals a raise in temperature the compressor will start and the hopper solenoid valve will be opened. It will continue to run until satisfied.

In the “clean” mode the drive motor will run continuously. (The compressor will not run in the “clean” mode.) This is for emptying out product for cleaning purposes.

There are eleven (11) lights on the circuit board that indicate the following: (See Figure I)

BARREL (D1) - Illuminated when the freezing cylinder (barrel) has achieved the pre-set temperature in the "Standby" mode.

HOPPER (D2) - Illuminated when the hopper has achieved the pre-set temperature in the "Standby" mode.

WASH (D3) - Illuminated when the mode switch is in the wash or "Clean" position.

FREEZE (D4) - Illuminated when the mode switch is in the "Freeze" mode.

DISPENSE (D5) - Illuminated when the dispensing valve is open calling for both the compressor and drive motor to operate.

GREEN CONSISTENCY (D6) - Off when the motor and compressor are off. Illuminated when the compressor and dasher are bringing product to preset consistency. Blinks as preset consistency is achieved and then goes out.

RED CONSISTENCY (D7) - Blinks as preset product consistency is approached. Glows steadily when preset consistency is achieved and then goes out.

COIL (D8) - Compressor contactor energized

COIL (D9) - Drive motor coil energized

COIL (D10) - Hopper refrigeration solenoid coil energized

COIL (D11) - Freezing cylinder refrigeration solenoid coil energized

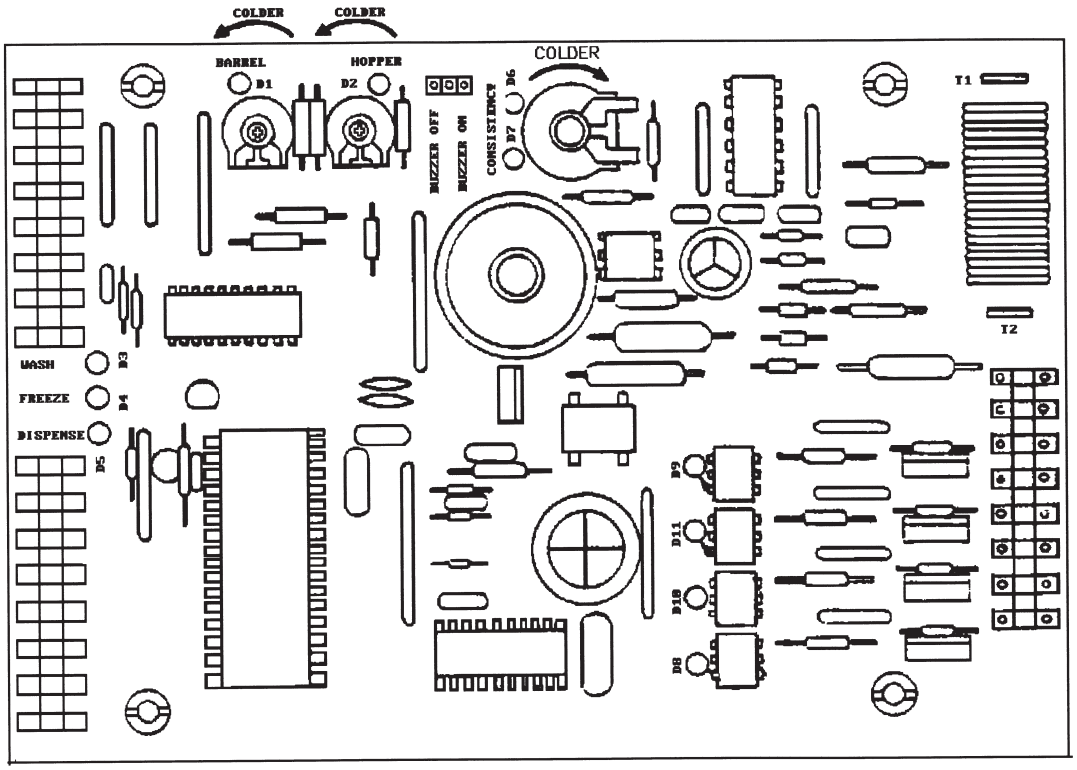

Figure I Electronic Control Board

CARE AND CLEANING

Note: Each time the freezer is disassembled, all internal freezer components must be thoroughly washed, scoured, and sanitized using procedures recommended by your local health department. In lieu of local health department recommendations, use a three compartment sink; one compartment to wash parts in detergent, one compartment to rinse, and one to sanitize.

Drain and Rinse

1. If the freezer is empty, proceed to “Cleaning Following Complete Disassembly of Unit” or “Daily Cleaning Procedure”. If the freezer is full of product, turn the mode switch to "CLEAN".

2. On freezers using the optional electric pump and tank assembly and optional Remote Fill Control, turn the switch on the Remote Fill Control to "OFF" and unplug the pump.

3. On freezers using the optional Remote Fill Control and Proportioning Pump, turn off the water valve on the Proportioning pump, using the valve next to the inlet pressure regulator.

4. Open the front dispensing valve and drain all product from the freezer. Close the dispensing valve and turn freezer to "OFF".

Note: Use approximately 2-1/2 gallons (10 liters) of cool water to rinse product out of the freezer.

5. Remove the carburetor tube and pour water into the storage hopper. Allow the water to fill the freezing cylinder.

6. Turn the mode switch to "CLEAN" for 5 minutes.

7. Open the dispensing valve and drain the water from the freezer.

Daily Cleaning Procedure (Clean-in-place)

1. Pull out valve handle retaining pin while supporting the valve plunger from the bottom (figure J). Push up on the valve plunger and remove the stainless handle (figure K). Slide the valve plunger and spring downward to remove (figure L). Remove the plunger “O” Rings as shown in figure M.

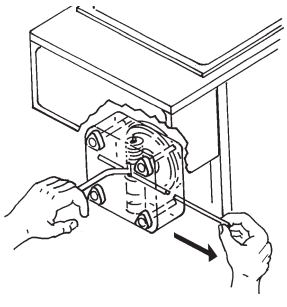

Figure J Remove Pin

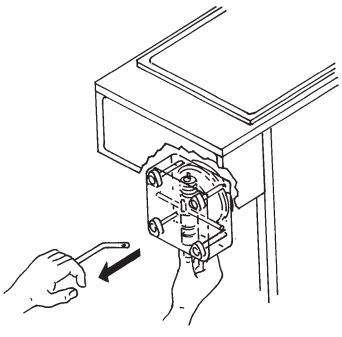

Figure K Remove Handle

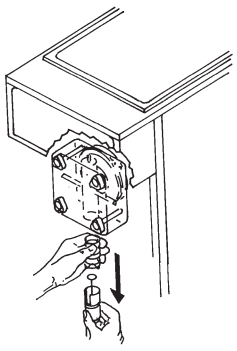

Figure L Remove Plunger and Spring

Daily Cleaning Procedure (cont.)

Note: The best way to remove an "O" Ring is to first wipe off all of the lubricant using a clean paper towel. Pinch the "O" Ring upward with a dry towel between your index finger and thumb. When a loop is formed in the "O" Ring, roll it out of the groove with your other thumb. Always remove the "O" Ring farthest from the end of the plunger first. (See figure M).

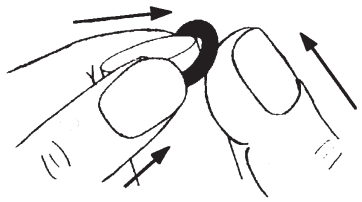

Figure M Ring Removal

2. Take all components to the cleaning area.

3. Carefully inspect the "O" Rings and replace if necessary.

Cleaning Carburetor, Dispensing Valve and Plunger Assembly

1. Prepare 1 gallon solution of hot tap water and a good grade of dish washing detergent.

2. Thoroughly wash valve plunger, spring, carburetor assembly and all "O" Rings in detergent solution.

3. Using medium sized brush (supplied with freezer) clean the bottom of the valve body and the inside of the plunger bore with detergent solution taking care to remove all remaining lubricant (figure N).

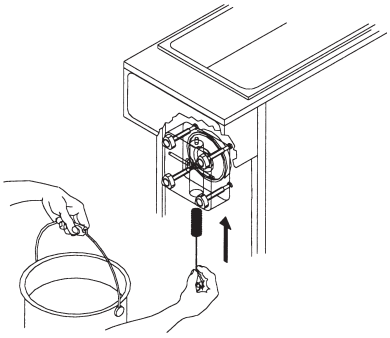

Figure N Clean Valve Body

Sanitizing Carburetor and Valve Components

1. Re-assemble carburetor assembly installing the two "O" Rings at the bottom of the carb tube.

2. Place the carburetor assembly in the bottom of the hopper.

3. Replace "O" Rings on valve plunger and lay plunger assembly on a clean piece of paper towel.

4. Prepare a minimum of 4 gallons (15 liters) of sanitizing solution (Stera Sheen Green Label or equivalent) following the manufacturer's instructions.

Note: Add 4 ounces of Stera Sheen to 4 gallons (15 liters) of 120° Fahrenheit (50° Centigrade) water to achieve a concentration of 100 parts per million.

5. Dip the medium sized brush (supplied) into the sanitizing solution and sanitize the inside bore of the dispensing valve (figure O).

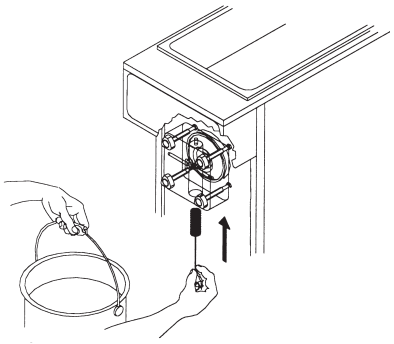

Figure O Sanitize Valve Body

6. Place a small amount of sanitary lubricant onto a piece of clean paper toweling (figure P).

7. Use a clean piece of paper toweling to pick up the small end of the valve plunger assembly. Apply the lubricant on the other piece of paper toweling to the "O" Rings on the valve plunger assembly (figure P).

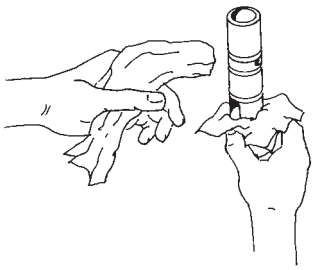

Figure P Lubricate Plunger

Sanitizing Carburetor and Valve Components (cont.)

8. Slide the valve plunger spring over the small end of the valve plunger and, using another clean piece of paper toweling, pick up the valve plunger at the outlet end and insert plunger and spring into the valve body (figure Q).

9. Push up on the valve plunger and insert the stainless steel handle (figure R).

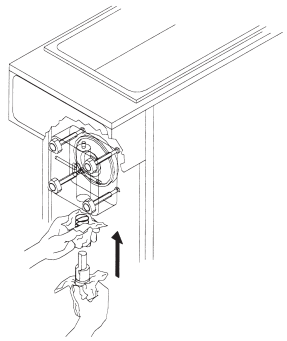

Figure Q Installing Plunger and Spring

10. Insert the dispensing valve handle retaining pin (figure S)

Sanitizing and Refilling

1. Pour sanitizing solution into the mix storage hopper and allow the solution to fill freezing cylinder. Use a large brush (supplied) to sanitize all hopper surfaces (figure T).

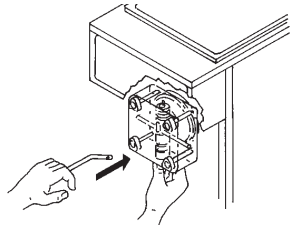

Figure R Insert Valve Handle

2. Turn panel switch to “CLEAN” and allow freezer to run for 20 minutes.

3. Open dispensing valve and drain solution. Allow the auger to push remaining sanitizer out of the freezing cylinder.

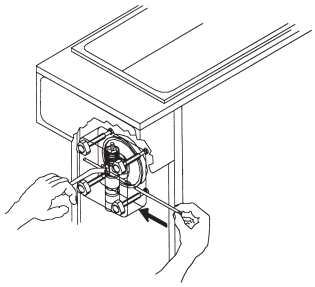

Figure S Insert Retaining Pin

4. Place a small amount of sanitary lubricant onto another piece of clean paper toweling (figure U).

5. Use a clean piece of paper toweling to pick up the large end of the carburetor from the bottom of the hopper taking care not to touch the sanitized carburetor with your bare hands.

6. Apply the lubricant on the other piece of paper toweling to the two “O” Rings on the bottom of the carburetor assembly (figure U).

7. Place the lubricated carburetor assembly on a clean piece of paper toweling.

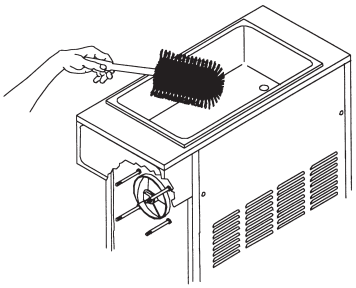

Figure T Sanitize Hopper

8. Use either fresh product or mix new product according to manufacturer’s instructions.

9. Fill mix storage hopper with product.

10. Open dispensing valve. Pour product into the hopper and allow this product to chase out any remaining sanitizer.

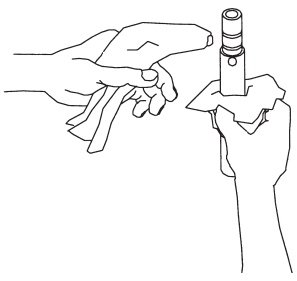

Figure U Lubricate Carb Tube

Sanitizing and Refilling (cont.)

11. Watch the product flowing out of the dispensing valve and close the valve when the sanitizer remaining in the cylinder has been purged by the new mix.

12. Use a clean piece of paper toweling to insert the sanitized carburetor assembly into the inlet hole in the hopper (figure V).

13. Fill mix storage hopper with fresh product.

14. Turn front panel switch to “ON”. Allow approximately 20 to 30 minutes for the freezer to reach proper consistency.

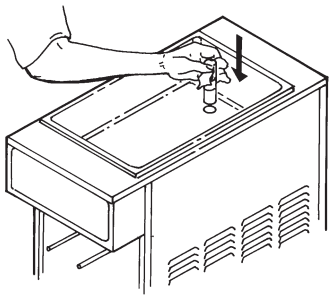

Figure V Carb Tube

Cleaning Following Complete Disassembly of Unit

1. Remove knobs and carefully remove the front dispensing valve assembly.

2. Disassemble the dispensing valve assembly by removing the retaining pin, pushing up on the plunger assembly and pulling out the handle. This will allow the plunger assembly, complete with O-Rings, to be removed as a unit. Remove the spring. Remove the O-Rings from the plunger assembly and back of the dispensing valve body. (See Figure W.)

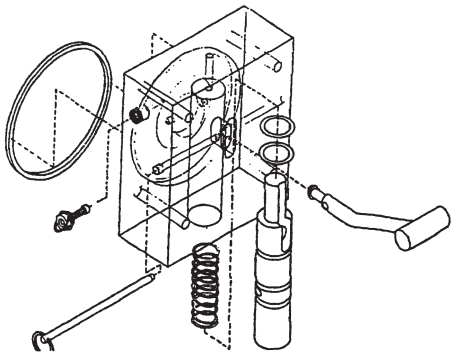

Figure W Exploded View of Dispensing Valve

Note: The best way to remove an O-Ring is to first wipe off all of the lubricant using a clean paper towel. Pinch the O-Ring upward with a dry towel between your index finger and thumb. When a loop is formed in the O-Ring, roll it out of the groove with your other thumb. Always remove the O-Ring farthest from the end of the plunger first. (See Figure X).

Note: Carefully inspect the O-Rings and replace if necessary.

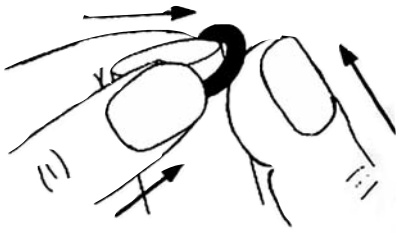

Figure X O-Ring Removal

3. Remove the dasher assembly taking care to avoid damaging the rear seal assembly at the back of the freezing cylinder.

4. Remove stationary portion of the shaft seal assembly from the back end of the freezer cylinder. This is accomplished by reaching into the cylinder and pulling seal out with your index finger. (See Figure Y)

5. Slide the rotary seal off the the auger shaft. Inspect both seal components carefully for nicks or cracks.
   Replace seal if defective.

Note: To prevent leakage, both surfaces of the seal must be smooth with no chips or cracks. Wash all components in a detergent solution, sanitize and allow to air dry.

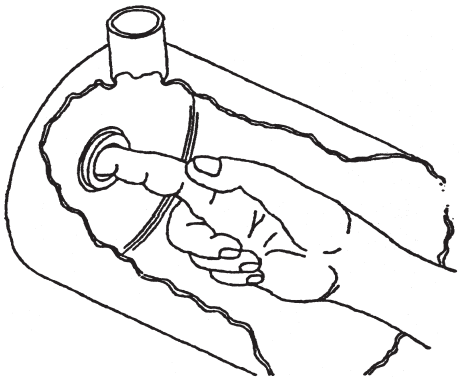

Figure Y Remove Stationary part of seal

Cleaning Following Complete Disassembly of Unit (cont.)

IMPORTANT: After disassembly, thoroughly scour each part of the freezer in a warm mild detergent solution including the inside of the freezing cylinder and the mix storage hopper. Rinse each part with clear water. Prepare a minimum of 3-1/2 gallons (13 liters) of sanitizing solution (Divorsol CX or equivalent) following the manufacturer's instructions.

Note: Add 3 ounces (85.4 mg) of Divorsol CX to 3-1/2 gallons (13 liters) of 120° Fahrenheit (50° Centigrade) water to achieve a concentration of 200 parts per million. Dip or wipe each part in sanitizing solution and allow them to dry on clean paper toweling.

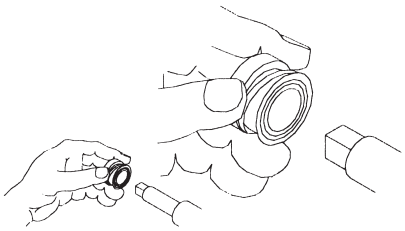

Figure Z Reassemble rotary portion of seal as shown

Reassembly

1. Wet the inner rubber lip of the rotary portion of the seal and the back end of the auger shaft with water. Slide rotary portion of assembly onto the auger shaft, RUBBER FIRST, with the smooth sealing surface toward the back of the auger. (See Figure Z)

2. Insert the stationary portion of the seal into the grooved rubber boot with the polished surface facing out (forward). Lubricate the grooved exterior portion of the boot and insert it straight back into recess at the back of the freezing cylinder, RUBBER FIRST. (See Figure AA & BB)

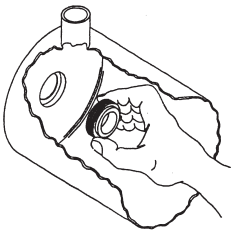

Figure AA Installing the stationary portion seal

Note: If the circular portion of the seal is white, make sure that the groove is toward the rubber (back of freezer).

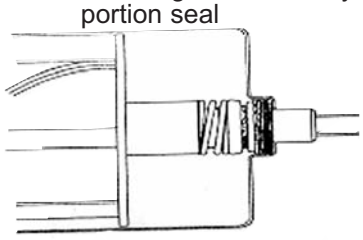

Figure BB Seal Assembly installed correctly

3. Reassemble the dasher assembly, as shown in Figure CC. Insert the larger front and smaller rear white plastic bearings into dasher, then slip in the stator rod. Attach scraper blades. **Carefully and slowly guide the auger into the freezing cylinder taking care not to damage the seal assembly.** Turn auger shaft until it engages the square drive coupling.

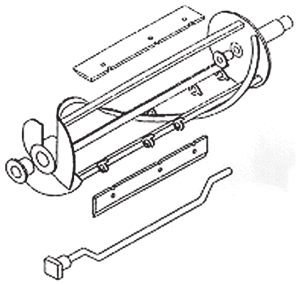

Figure CC

4. Reassemble the dispensing valve assembly as shown in Figure DD. Thoroughly wash and sanitize all components, lubricate the inside bore of valve body with a thin film of food grade sanitary lubricant. Reinstall the O-Rings on the plunger assembly and lubricate the entire plunger. Reassemble the valve and replace the retainer pin. Inspect and lubricate the large O-Ring and refit it into the rear of the valve assembly. Install the valve assembly on the front studs and tighten knobs until they are finger tight. ***Do not use tools to tighten knobs***.

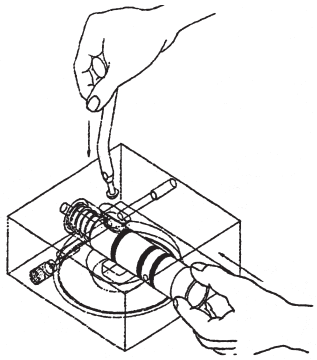

Figure DD

Reassembly (cont.)

5. Disassemble the carburetor assembly and remove the O-Rings. Wash and sanitize all parts.

6. Reinstall and lubricate the O-Rings and slip on the outer tube if equipped. (See Figure EE)

Figure EE

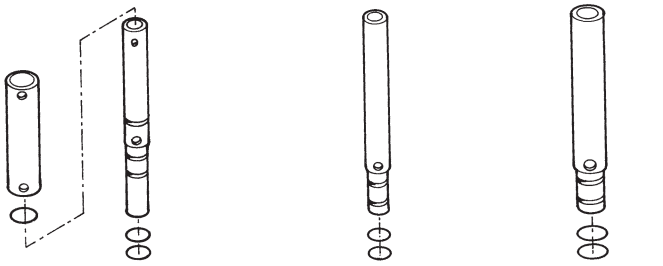

Thick product carb tube | Standard carb tube | Low overrun carb tube

Sanitizing and Refilling

1. Prepare a minimum of 3-1/2 gallons (13 liters) of sanitizing solution (Divorsol CX or equivalent) following the manufacturer's instructions.

Note: Add sanitizer to 3-1/2 gallons of water (warm) to achieve a concentration of 200 parts per million.

2. Pour sanitizing solution into the mix storage hopper and allow the solution to fill freezing cylinder. Use a brush to clean the hopper sides and bottom.

3. Turn panel switch to "CLEAN" and allow freezer to run for 5 minutes.

4. Open dispensing valve and drain solution. Turn freezer to "CLEAN" for a few seconds to allow the auger to push remaining sanitizer out of the freezing cylinder.

5. If you are using a concentrated product, mix the product according to the manufacturer's instructions.

6. Open dispensing valve. Pour product into the hopper and allow this product to chase out any remaining sanitizer. Watch the product flowing out of the dispensing valve and close the valve when the new mix has purged the sanitizer remaining in the cylinder.

7. Sanitize and install the carburetor. (Figure R). Refill mix hopper.

8. Turn front panel switch to "ON". Allow approximately 20 to 30 minutes for the freezer to reach proper consistency.

MAINTENANCE

Suggested Weekly Maintenance

1. Clean, lubricate and sanitize the freezer following guidelines in (Care and Cleaning).

2. Clean the exterior of the freezer using a soft wet cloth.

How to Clean Exposed Filter:

1. Slide exposed filter out of the rails by pulling forward on the filter. It is recommended to remove the filter by using the palm of your hand and applying even pressure to the face of the filter.

2. Clean filter with liquid soap and water.

3. Soak filter for 15 minutes.

4. Rinse filter with heavy stream of water, opposite the direction of air flow. Allow filter to dry.

5. Slide the filter into the rails until the filter contacts the stop on the top rail.

How to Clean Concealed Filter:

1. For concealed filters lift lid and pull up on filter tab to remove filter.

2. Clean filter with liquid soap and water.

3. Soak filter for 15 minutes.

4. Rinse filter with heavy stream of water, opposite the direction of air flow. Allow filter to dry.

5. Slide filter into top of filter cover with removal clip up and the air flow arrows facing the existing panel.

⚠ **CAUTION: Disconnect power for maintenance. Do not attempt to perform maintenance on the freezer until electrical power has been disconnected.**

How to Clean Condenser

Note: Loss of refrigeration efficiency will result if condenser is allowed to become dirty. Excessive compressor run time or loss of capacity is a good indication that the condenser needs to be cleaned.

1) **Disconnect electrical power.**

2) Remove side panels.

3) Place a damp towel over the side of condenser opposite the fan motor.

4) Use compressed air or CO_2 to blow out dirt from the fan side of the condenser.

5) An alternate cleaning method is to use a condenser brush and a vacuum cleaner.

⚠ **CAUTION: Procedure can create a loud noise.**

Annual Maintenance

1. Disconnect electrical power.

2. Clean condenser.

3. Remove dispensing valve assembly and replace all O-Rings. (See Care and Cleaning).

Annual Maintenance (cont.)

4. Remove dasher assembly, inspect stator bearings and replace shaft seal set. (See Care and Cleaning).

5. Remove rear panel and inspect "V" belt.

6. Inspect the drive shaft square hole for wear (rounding-out).

7. Check drive shaft and motor shaft bearings for excessive wear.

8. Reinstall side and back panels.

9. Re-connect power supply.

Belt Adjustment

⚠ **CAUTION: Unplug the machine before performing any adjustments. This procedure must be done by a qualified technician.**

Check the belt tension. The proper belt deflection is 1/2" overall. If the deflection is more than 1/2" the motor will need to be lowered. If the deflection is less than 1/2" the motor will need to be raised. Follow this procedure to adjust the motor to achieve proper belt tension.

1) Unplug the machine and remove both side and the rear panels.

2) Locate the motor flange bearings (#W038.0009). These are the pillow block bearings that hold the motor to the cradle. The motor is double shafted and the shaft extends through a bearing on each end. The bearing is held to the motor cradle by two allen bolts on each bearing.

3) Loosen the allen bolts on each bearing. Do not loosen the set screws that hold the bearing collar to the motor shaft.

4) Lower the motor or raise the motor as needed. The motor must be kept level from front to back. Do not lower or raise only one end of the motor. This will result in excessive belt wear and belt noise.

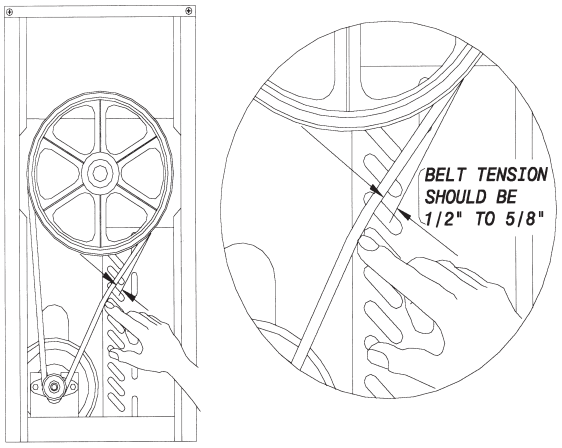

5) Tighten all four allen bolts down. Align the motor pulley with the top pulley if needed.

6) The motor pulley should be in alignment with the large (driven) top pulley. Use a straight edge along the top pulley.

7) If the pulleys are not in alignment, remove the setscrew from the motor pulley and move either in or out as needed.

8) Reinstall the setscrew. Use non-permanent loc-tite on the setscrew and tighten it back down on the motor shaft. Be sure the setscrew is tightened down flat on the motor shaft.

9) Return the unit back to service.

5000 SERIES FREEZER SPECIFICATIONS:

Specification	Model 5311	Model 5511	Model 5711	Model 5941
Circuit NEMA#	NEMA 5-20R	NEMA 6-20R	NEMA 6-20R	NEMA 5-15R
Electrical	115 volt, 60 Hz, 1 Phase Dedicated 20 Amp circuit	208/230 volt, 60 Hz, 1 Phase Dedicated 20 Amp circuit	208/230 volt, 60 Hz, 1 Phase	115 volt, 60 Hz, 1 Phase 15 Amp circuit
Drive Motor	1/4 hp, Capacitor Start/Run	1/2 hp, Capacitor Start/Run	1/2 hp, Capacitor Start/Run	1/4 hp, Capacitor Start/Run
Compressor	3/4 hp	1 hp	1-1/2 hp	N/A Note: Freezer must be connected to a separate condensing unit.
Cooling	Air Cooled (Optional Water Cooled)	Air Cooled	Air Cooled (Optional Water-Cooled)	N/A
Actual Weight	175 lbs. (79.4 kg)	185 lbs. (84 kg)	260 lbs. (97 kg)	140 lbs. (63.5 kg)
Mix Hopper Capacity	5 gallons (18.9 liters)	5 gallons (18.9 liters)	5 gallons (18.9 liters)	5 gallons (18.9 liters)
Freezing Cylinder Capacity	1-1/2 gallons (5.7 liters)	1-1/2 gallons (5.7 liters)	1-1/2 gallons (5.7 liters)	1-1/2 gallons (5.7 liters)
Refrigerant	See Serial Number Plate	See Serial Number Plate	See Serial Number Plate	See Serial Number Plate
Refrigerant Charge	See Serial Number Plate	See Serial Number Plate	See Serial Number Plate	See Serial Number Plate
High Side (approximate operating pressure)	275 to 350 psi (19 to 25 k/cm)	275 to 350 psi (19 to 25 k/cm)	275 to 350 psi (19 to 25 k/cm)	240 to 270 psig (ambient dependent)
Low Side (approximate operating pressure)	35 (w/ standard) to 45 (w/ scraper blade auger) psi (2.5 to 3 k/cm)	40 psig (w/ scraper blade auger)	32 to 40 psig	32 to 38 psig (load dependent)
High Side Design Pressure	420 psig	460 psig	331 psig	420 psig
Low Side Design Pressure	174 psig	174 psig	174 psig	174 psig

Specifications are subject to improvement or change without notice.

Part Description	Monthly	Every 3 Months	Every 6 Months	Annually	Quantities to be Replaced
Shaft seal				Inspect & replace if necessary	1
Drive shaft				Inspect & replace if necessary	1
Drive belts				Inspect & replace if necessary	1
Scraper blades on dasher			Inspect & replace if necessary		2
Square cut o-ring on valve body/face plate				Inspect & replace if necessary	1
Front stator flange bearing				Inspect & replace if necessary	1
Rear stator flange bearing				Inspect & replace if necessary	1
Dispense valve o-rings		X			Thick Product plunger:2 Standard Product plunger:3
Carb tube o-rings		X			2 or 3
Cleaning brush			Inspect & replace if necessary	Maximum	1
Condenser		Inspect & clean if necessary		Maximum	1

Refer to the Crathco Parts Price List when ordering the above parts

TROUBLESHOOTING

⚠ ***Only a qualified service technician should perform electrical and mechanical adjustments or repairs. Always disconnect power before attempting any maintenance procedures.***

Problem	Possible Cause	Solution
Freezer will not run or freeze down	• Freezer not plugged in • Circuit breaker tripped or fuse blown • Freezer in "CLEAN" position • Dasher or scraper blades not installed • Obstructed condenser air flow • Freezer in "Stand-by" mode • (Model 5511) High pressure safety switch tripped.	• Plug in machine • Reset breaker or replace fuse • Switch to "FREEZE" • Install dasher and blades • Allow 6” (15cm) on sides • Switch to "FREEZE" • Clean condenser, check for 6" air clearance on each side of unit
Product too soft	• Improper consistency control setting • Mixed soft, no overrun • Carburetor set incorrectly • Extended non-draw period	• Re-adjust consistency control • Drain and refill with fresh mix • Re-adjust carburetor • Use STANDBY during slow business periods
Improper product taste	• Mix spoiled • Used rerun/leftover mix • Frozen product too fluffy and icy (Product frozen too long, low draw)	• Check date code, use only fresh mix • Use only fresh mix • Draw out 1 quart (1 liter), dispose of product. Allow product to refreeze
Frozen product too stiff, or freezer runs continuously	• Consistency control set too firm • Dispensing valve not fully closed	• Re-adjust consistency control • Close valve, lubricate properly
Frozen product not dispensing	• Power switch OFF • Insufficient mix in storage hopper, light on, beeper • Carburetor in off position, between holes • Carburetor inlet hole clogged • Foam buildup, liquid mix cannot feed properly • Drive belt broken or off of pulley • Machine in STAND-BY mode	• Turn Power Switch to ON • Refill storage hopper • Set carburetor to proper hole size • Unclog carburetor • Remove foam from hopper using sanitized utensil • Replace or repair • Set switch to FREEZE
Liquid coming out of drain tube, front of freezer	• Worn, defective or improperly installed seal	• Replace and lubricate per manual
Excessive dispensing valve leakage	• Worn or defective O-Rings	• Replace and lubricate at each cleaning
Scraping sound during freeze down	• Frozen product scraping off of cylinder walls	• Normal sound during freeze down, goes away when product is frozen to proper consistency

TROUBLESHOOTING (cont.)

Problem	Possible Cause	Solution
Clicking sound from electrical box	• Low voltage • Extension cord or improperly sized electrical wire	• Connect freezer to dedicated circuit of proper rating • Connect freezer directly to power source using properly sized wiring
Merchandiser light flickers when freezer cycles	• Low voltage	• Connect freezer to dedicated circuit or proper rating
Thumping sound from inside freezer	• Worn drive belt	• Replace belt

If you still need help, call our service department at (800) 695-4500 (USA & Canada only) or (502) 425-4776 (Monday through Friday, 8 am - 6 pm EST) or an authorized service center in your area. Please have the model and serial numbers ready so that accurate information may be given.

Prior authorization must be obtained from Grindmaster-Cecilware's Technical Services Department for all warranty claims.

Exploded View Model 5311

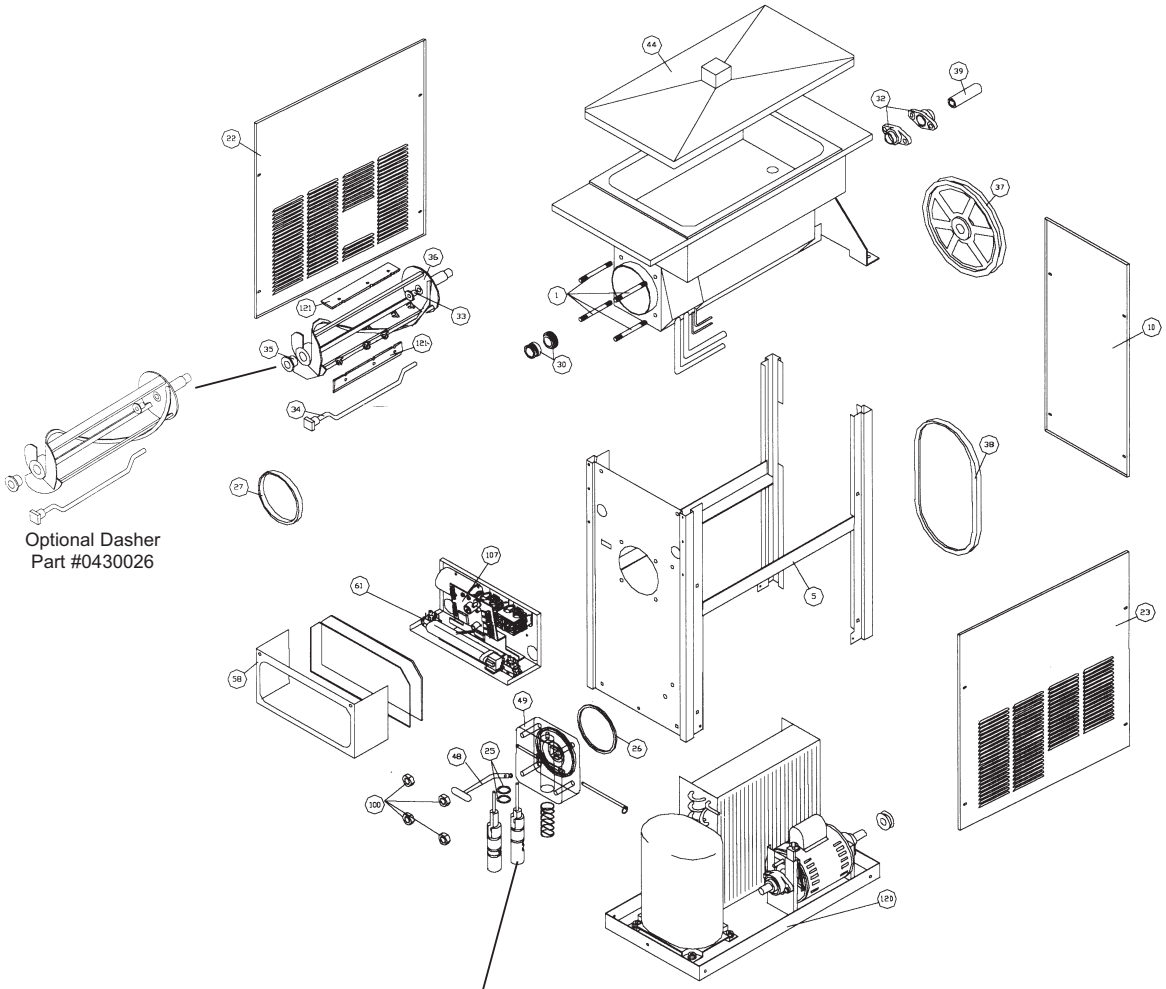

Optional Dasher
Part #0430026

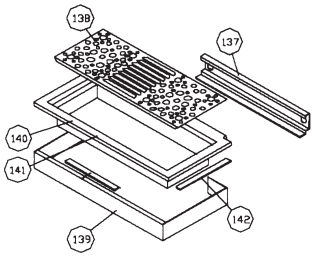

Optional X-large drip pan
for units with spinners

Optional Thick Product plunger

Item	Part Number	Description
1	W0110002	Valve Stud
5	W0210171	Frame Assembly
10	W0520063	Stainless Steel Rear Panel
22	W0520064	Stainless Steel Side Panel Left
23	W0520065	Stainless Steel Side panel Right
25	W0340022	213 O-Ring
27	W0340058	Barrel Gasket
30	W0340210	Seal Set Standard
32	W0389001	Modified Flange Bearing
33	W0430024	Blind Flange Bearing
34	W0430028	Stator Rod Weldment
35	W0430032	Stator Flange Bearing
36	W0430089	Scraper Dasher
37	W0450008	Pulley (10 inch)
38	W0450209	Drive V-Belt
39	W0451067	Drive Shaft
44	W0520094	Hopper Cover Black
48	W0480445	Valve Handle
49	W0480450	Valve Body
58	W0572286	Electrical Box Cover
61	W0572340	Electrical Box Assembly
100	W0630711	Valve Knob
107	W0650913	Circuit Board
120	W0212081	Base Assembly
121	W1431084	Scraper Blade
137	W0472064	Drip Pan Bracket
138	W0472063	Drip Pan Insert
139	W0472062	Drip Pan Form
140	W0631631	Plastic Drip Pan (white)
141	W0631632	Plastic Drip Pan (black)
142	W0670007	Sound Insulation

Exploded View Model 5511

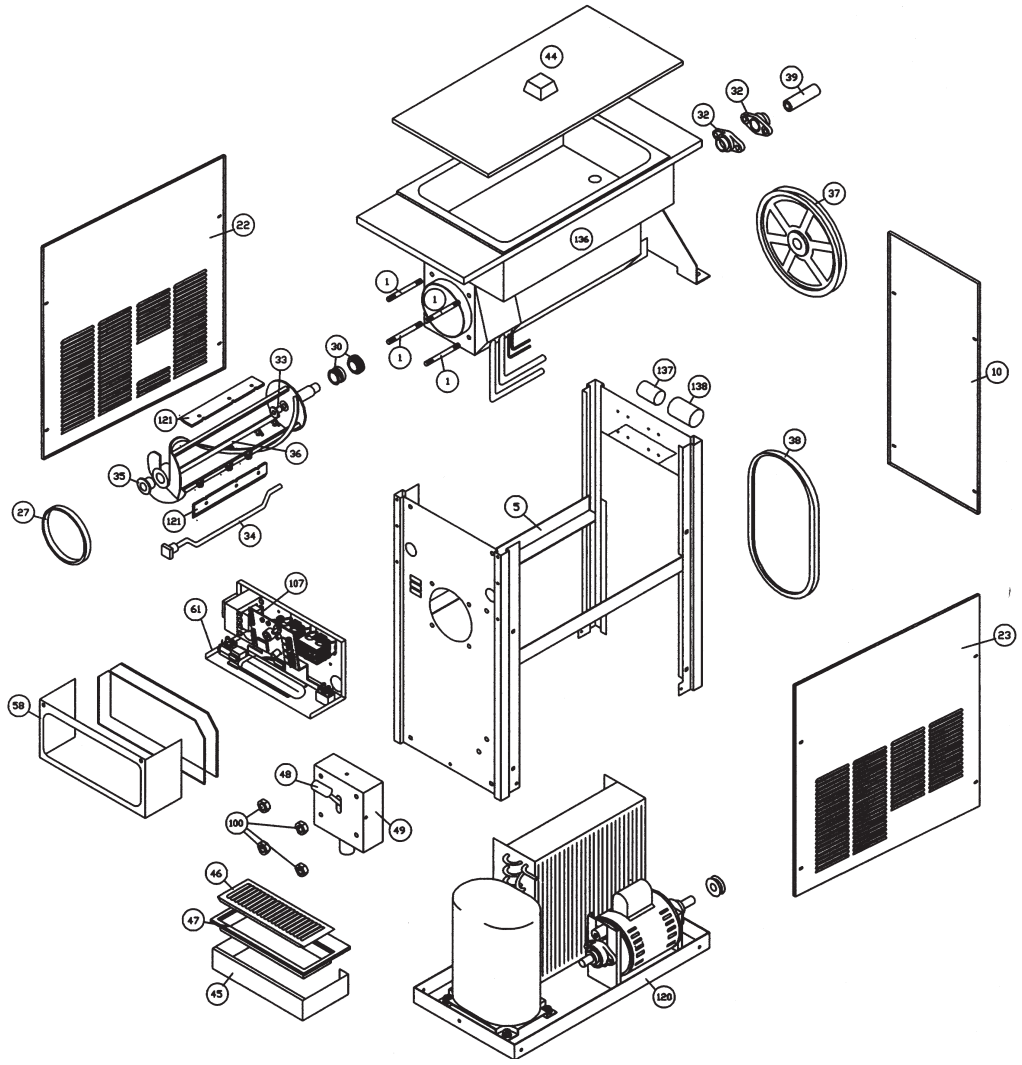

Item	Part Number	Description
1	W0110002	Valve Stud
5	W0210171	Frame Assembly
10	W0520063	Stainless Steel Rear Panel
22	W0520064	Stainless Steel Side Panel Left
23	W0520065	Stainless Steel Side Panel Right
27	W0340058	Barrel Gasket
30	W0340210	Shaft Seal Set
32	W0380025	Flange Bearing
33	W0430024	Blind Flange Bearing
34	W0430028	Stator Weldment
35	W0430032	Stator Flange Bearing
36	W0430089	Scraper Dasher
37	W0450053	Pulley (10 inch)
38	W0450209	V-Belt
39	W0451067	Slush Drive Shaft
44	W0520094	Hopper Cover, Black
45	W0472062	Drip Pan Bkt For X-LG
46	W0472063	Drip Pan Insert
47	W0631632	Plastic Drip Pan Black
48	W0480445	Valve Handle
49	W0480450	Valve Body
58	W0572452	Electrical Box Cover
61	W0572454	Electrical Box Assembly
100	W0630711	Valve Knobs
107	W0650913	Circuit Board
120	W0212000	Base Assembly Shake Machine
121	W1431084	Scraper Blade
136	W0201335	Evaporator Assembly
137	W0570617	Run Capacitor
138	W0570619	Start Capacitor

5511-0109-015-3-20-00

Exploded View Model 5941

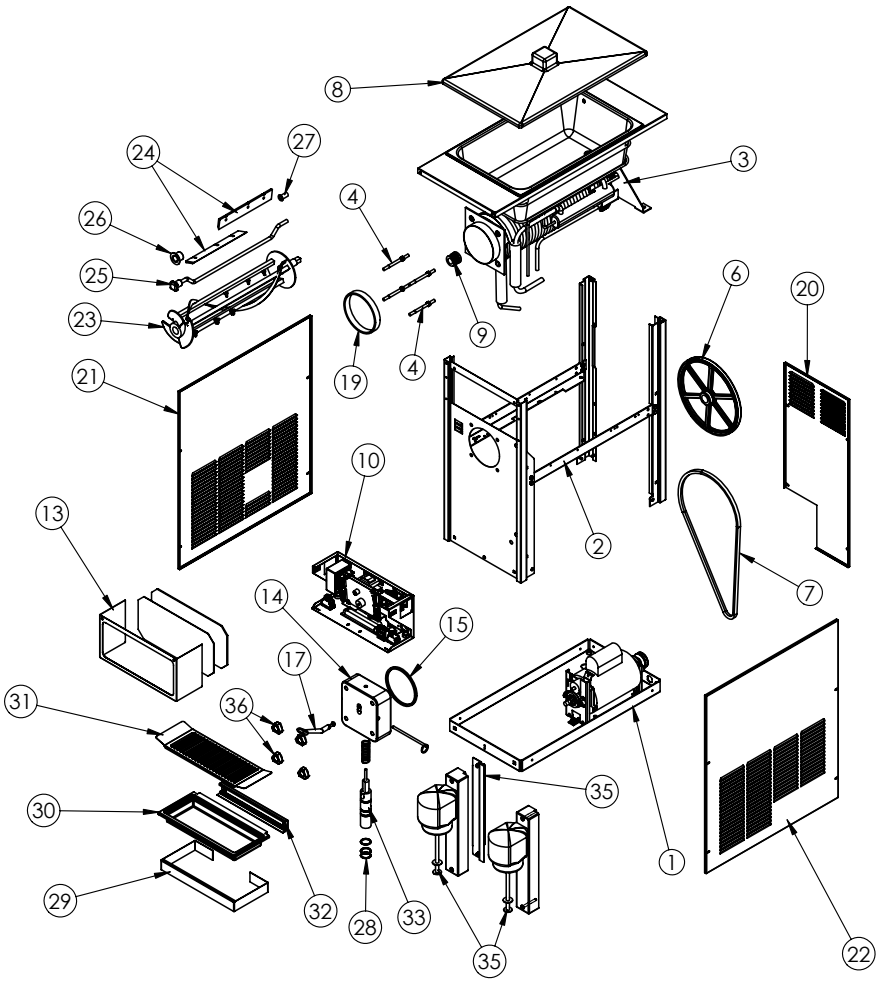

ITEM NO.	QTY.	PART NUMBER	DESCRIPTION
1	1	W0210257	BASE ASSEMBLY
2	1	W0211232	FRAME ASSEMBLY
3	1	W0201346	EVAPAORATOR ASSY, 5311 & 5511
4	4	W0110013	STUD, VALVE NEW STYLE
6	1	W0450053	PULLEY, 10" W/ 1" BORE
7	1	W0450209	V-BELT 3L460 X 3/8" FHP
8	1	W0520094	Hopper Cover Single
9	1	W0340201	Shaft Seal Set
10	1	W0572458	Electrical Box Assy. 5941
13	1	W0572452	Electrical Box Cover
14	1	W0480450	Valve Body
15	1	W0340055	Valve Square Cut O-Ring
17	1	W0480445	VALVE HANDLE
19	1	W0340058	Barrell Gasket
20	1	W0520097	Panel, Rear 5941
21	1	W0520107	Left Side Panel
22	1	W0520065	Right Side Panel
23	1	W0430089	Dasher, Scraper
24	2	W1431084	Scraper Blade, New Style
25	1	W0430028	STATOR WELDMENT PICKLED
26	1	W0430032	STATOR FLANGE BEARING
27	1	W0430024	REAR STATOR BEARING
28	3	W0340022	Plunger O'Rings
29	1	W0472062	Pan,Drip Form X-LG
30	1	W0631632	Drip Tray
31	1	W0472074	Insert, Drip Pan
32	1	W0472064	Drip Pan Bracket
33	1	W0480462	Plunger, Standard Product 5000
34	2	W0470015	Spinner, DMC180
35	1	W0210258	SPINNER BRKT ASSEMBLY, LEFT
36	4	W0630711	Valve Knob

Exploded View Model 5711-B

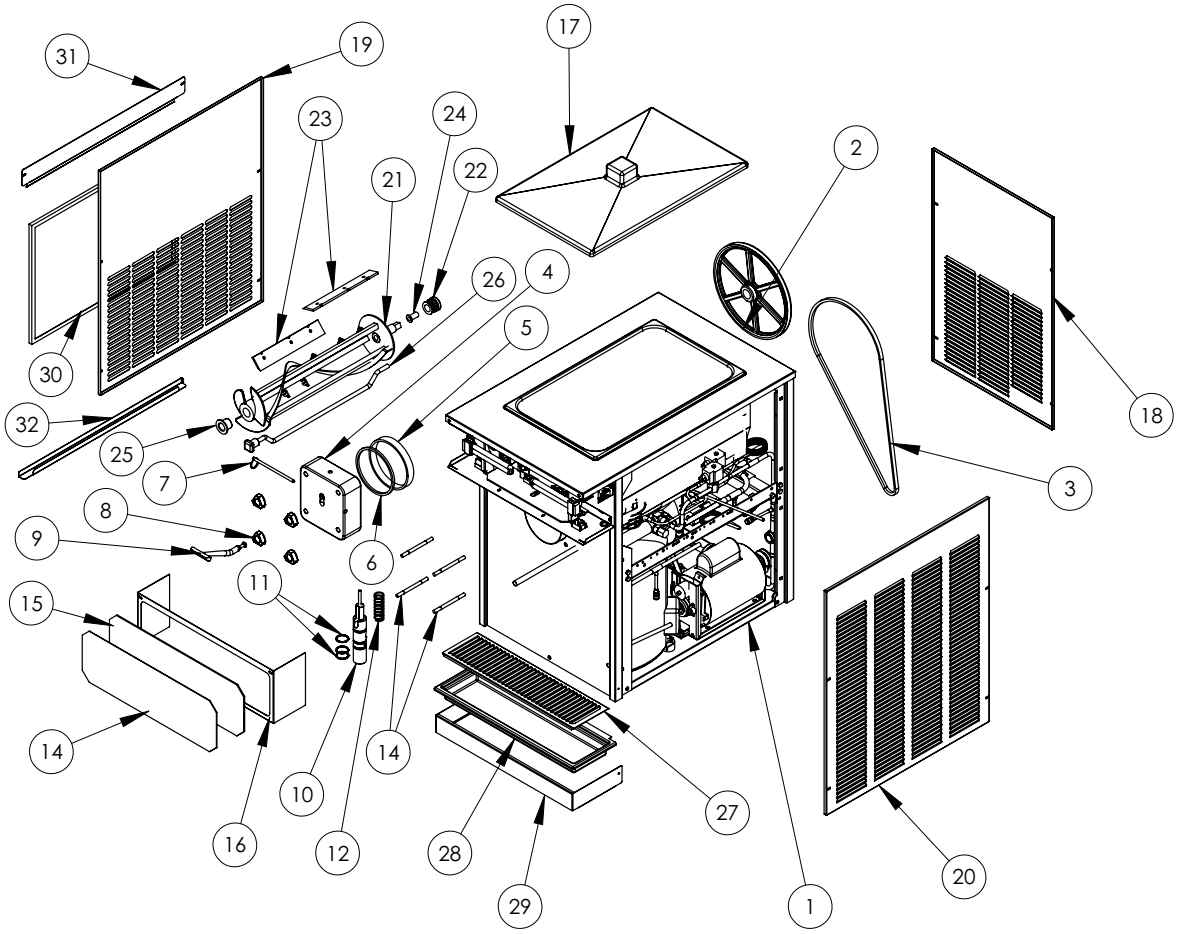

ITEM NO.	PART NUMBER	Title	Manual/QTY.
1	W0151029	Stock Assy,5711-B	1
2	W0450053	PULLEY, 10" W/ 1" BORE	1
3	W0450211	Belt,V,49"	1
4	W0480450	Valve Body	1
5	W0340058	Barrell Gasket	1
6	W0340055	Valve Square Cut O-Ring	1
7	W0611728	FasPin, Valve	1
8	W0630711	Valve Knob	4
9	W0480445	Valve Handle	1
10	W0480462	PLUNGER, STD PROD 5000 SERIES	1
11	W0340022	Plunger O'Rings	3
12	W0631230	Valve Spring	1
14	W0110013	STUD, VALVE NEW STYLE	4
14	W0631638	Front Display 5711,	1
15	W0631639	Front Display 5711,	1
16	W0520145	Elec. Box Cover	1
17	W0520094	Hopper Cover Single	1
18	W0520080	Rear Panel 3312	1
19	W0520137	Panel, L. H. Side 5711	1
20	W0520136	Panel, R.H. Side 5711	1
21	W0430089	Dasher, Scraper	1
22	W0340201	Shaft Seal Set,FDA Buna	1
23	W1431084	Scraper Blade, New Style	2
24	W0430024	REAR STATOR BEARING	1
25	W0430032	STATOR FLANGE BEARING	1
26	W0430028	STATOR WELDMENT PICKLED	1
27	W0472078	Insert,Drip Tray,5711	1
28	W0472077	Drip Pan,5711	1
29	W0472076	Pan, Drip Form, 5711	1
30	w0631805	FILTER 14" X 19.5" X 3/8"	1
31	W0520109	TOP FILTER COVER FOR 14 X 20 FILTER	1
32	W0520110	BOTTOM FILTER COVER FOR 14 X 20 FILTER	1

Exploded View Model 5711-C

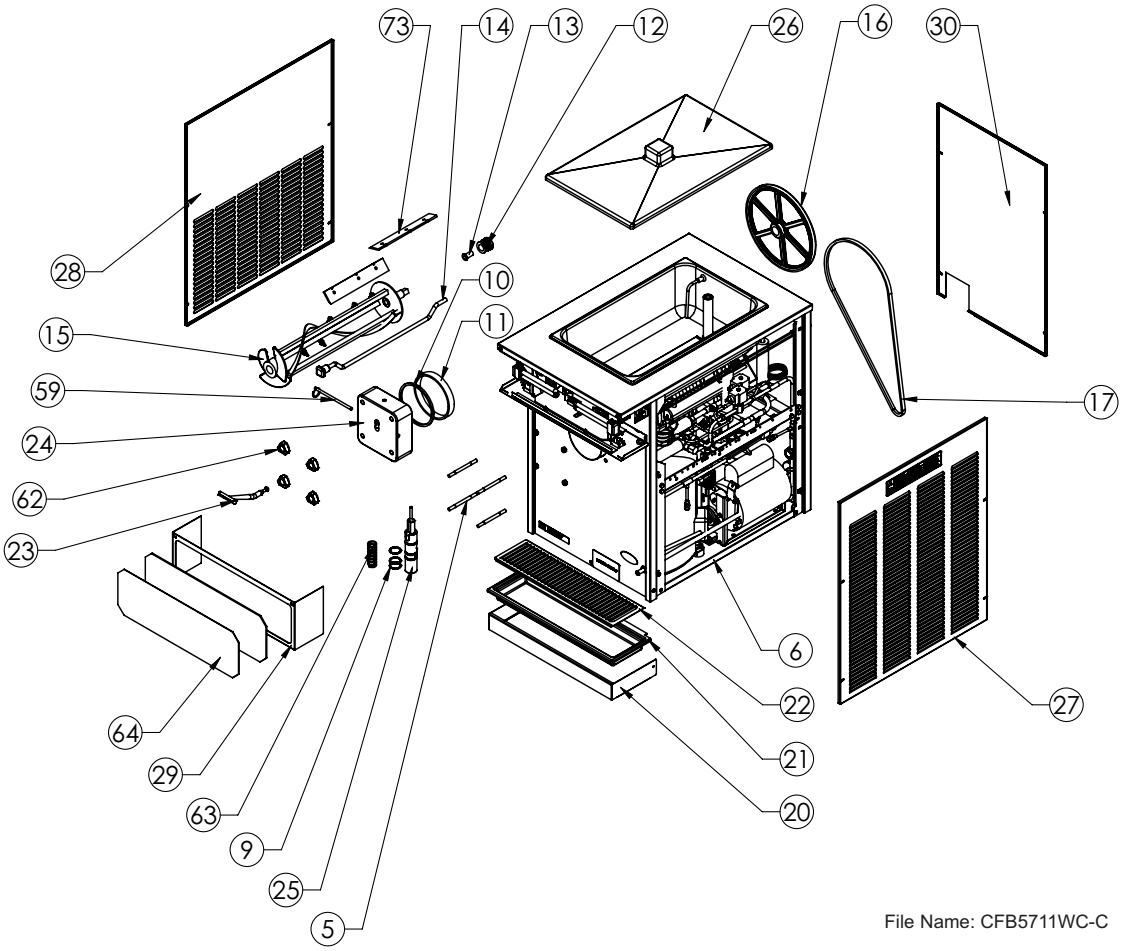

File Name: CFB5711WC-C

ITEM NO.	PART NUMBER	DESCRIPTION	Default/QTY.
5	W0110013	STUD, VALVE NEW STYLE	4
6	W0159049	Stock Assy, 5711-C	1
9	W0340022	Plunger O'Rings	3
10	W0340055	Valve Square Cut O-Ring	1
11	W0340058	Barrell Gasket	1
12	W0340201	Shaft Seal Set,FDA Buna	1
13	W0430024	REAR STATOR BEARING	1
14	W0430028	STATOR WELDMENT PICKLED	1
15	W0430089	Dasher, Scraper	1
16	W0450053	PULLEY, 10" W/ 1"BORE	1
17	W0450211	Belt,V,49"	1
20	W0472076	Pan, Drip Form, 5711	1
21	W0472077	Drip Pan,5711	1
22	W0472078	Insert,Drip Tray,5711	1
23	W0480445	Valve Handle	1
24	W0480450	Valve Body	1
25	W0480462	PLUNGER, STD PROD 5000 SERIES	1
26	W0520094	Hopper Cover Single	1
27	W0520136	Panel, R.H. Side 5711	1
28	W0520137	Panel, L. H. Side 5711	1
29	W0520145	Elec. Box Cover	1
30	W0529064	Panel, Rear, Model 5711 Water	1
59	W0611728	Valve Pin	1
62	W0630711	Valve Knob	4
63	W0631230	Valve Spring	1
64	W0631639	Front Display 5711,	2
73	W1431084	Scraper Blade, New Style	2

Exploded View Model 5711-A (Spinners)

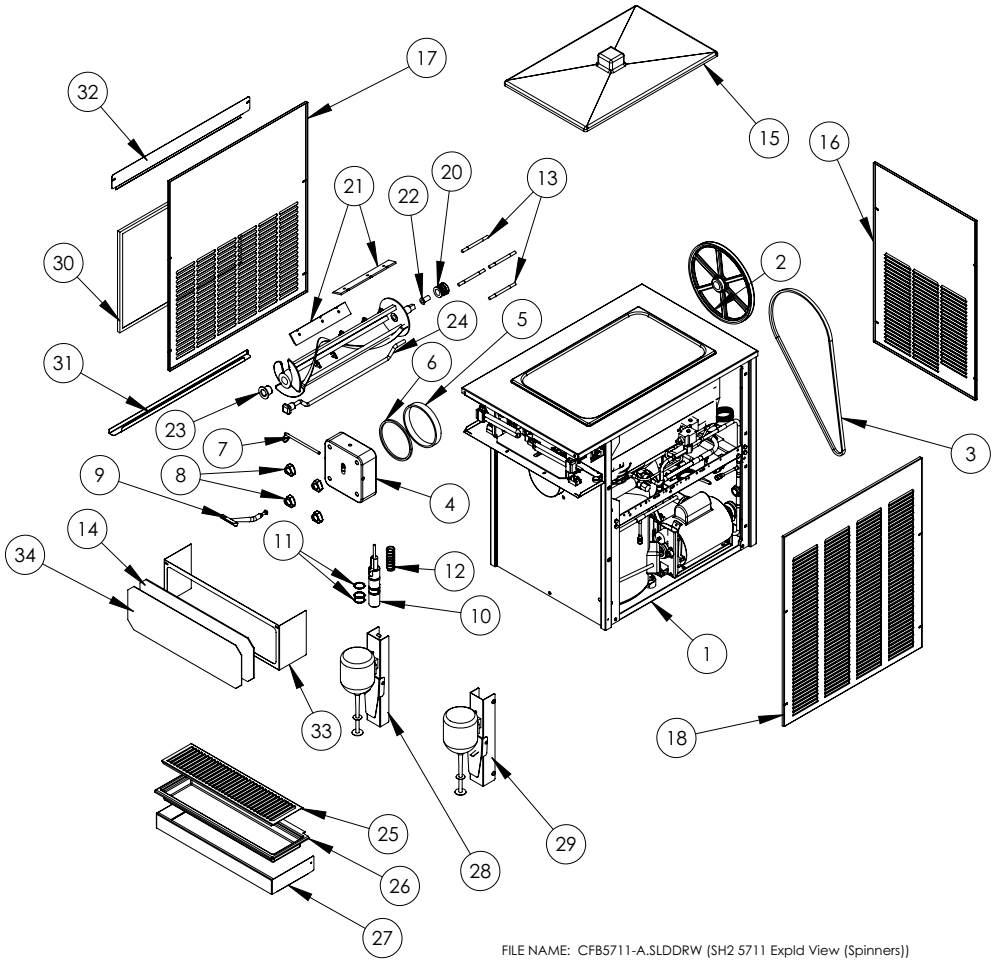

FILE NAME: CFB5711-A.SLDDRW (SH2 5711 Expld View (Spinners))

ITEM NO.	PART NUMBER	Title	Qty.
1	W0151027	Stock Assy,5711-A	1
2	W0450053	PULLEY, 10" W/ 1" BORE	1
3	W0450211	Belt,V,49"	1
4	W0480450	Valve Body	1
5	W0340058	Barrell Gasket	1
6	W0340055	Valve Square Cut O-Ring	1
7	W0611728	FasPin, Valve	1
8	W0630711	Valve Knob	4
9	W0480445	Valve Handle	1
10	W0480462	PLUNGER, STD PROD 5000 SERIES	1
11	W0340022	Plunger O'Rings	3
12	W0631230	Valve Spring	1
13	W0110013	STUD, VALVE NEW STYLE	4
14	W0631639	Front Display 5711,	1
15	W0520094	Hopper Cover Single	1
16	W0520080	Rear Panel 3312	1
17	W0520137	Panel, L. H. Side 5711	1
18	W0520136	Panel, R.H. Side 5711	1
19	W0430089	Dasher, Scraper	1
20	W0340201	Shaft Seal Set,FDA Buna	1
21	W1431084	Scraper Blade, New Style	2
22	W0430024	REAR STATOR BEARING	1
23	W0430032	STATOR FLANGE BEARING	1
24	W0430028	STATOR WELDMENT PICKLED	1
25	W0472078	Insert,Drip Tray,5711	1
26	W0472077	Drip Pan,5711	1
27	W0472076	Pan, Drip Form, 5711	1
28	W0471141-1	Mixer Assy, Sterling,230v, Left	1
29	W0471141-2	Mixer Assy, Sterling,230v,Right	1
30	w0631805	FILTER 14" X 19.5" X 3/8"	1
31	W0520110	BOTTOM FILTER COVER FOR 14 X 20 FILTER	1
32	W0520109	TOP FILTER COVER FOR 14 X 20 FILTER	1
33	W0520145	Elec. Box Cover	1
34	W0631638	Front Display 5711,	1

Exploded View Model 5711-B Stock Assembly

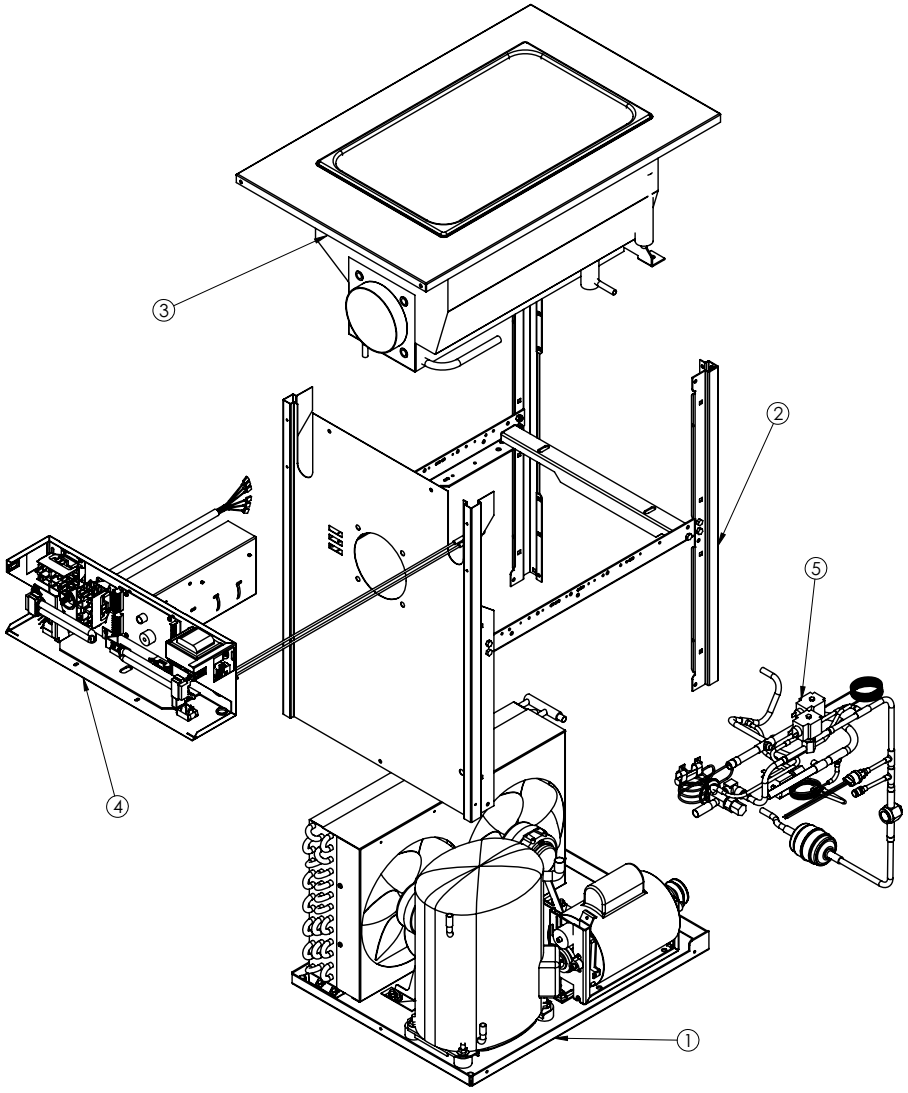

FILE NAME: W0151029.SLDDRW (SH2 5711 Exploded Stock Assy.

ITEM NO.	PART NUMBER	Title	Qty.
1	W0211235	Base Assy,5711	1
2	W0211236	FRAME ASSEMBLY, 5711	1
3	W0201280	EVAPAORATOR ASSY, 5711	1
4	W0572756	Electrical Box Assembly, 5711-B	1
5	W0207198	Refrigeration Tube Assy.	1

Exploded View Model 5711-C Stock Assembly

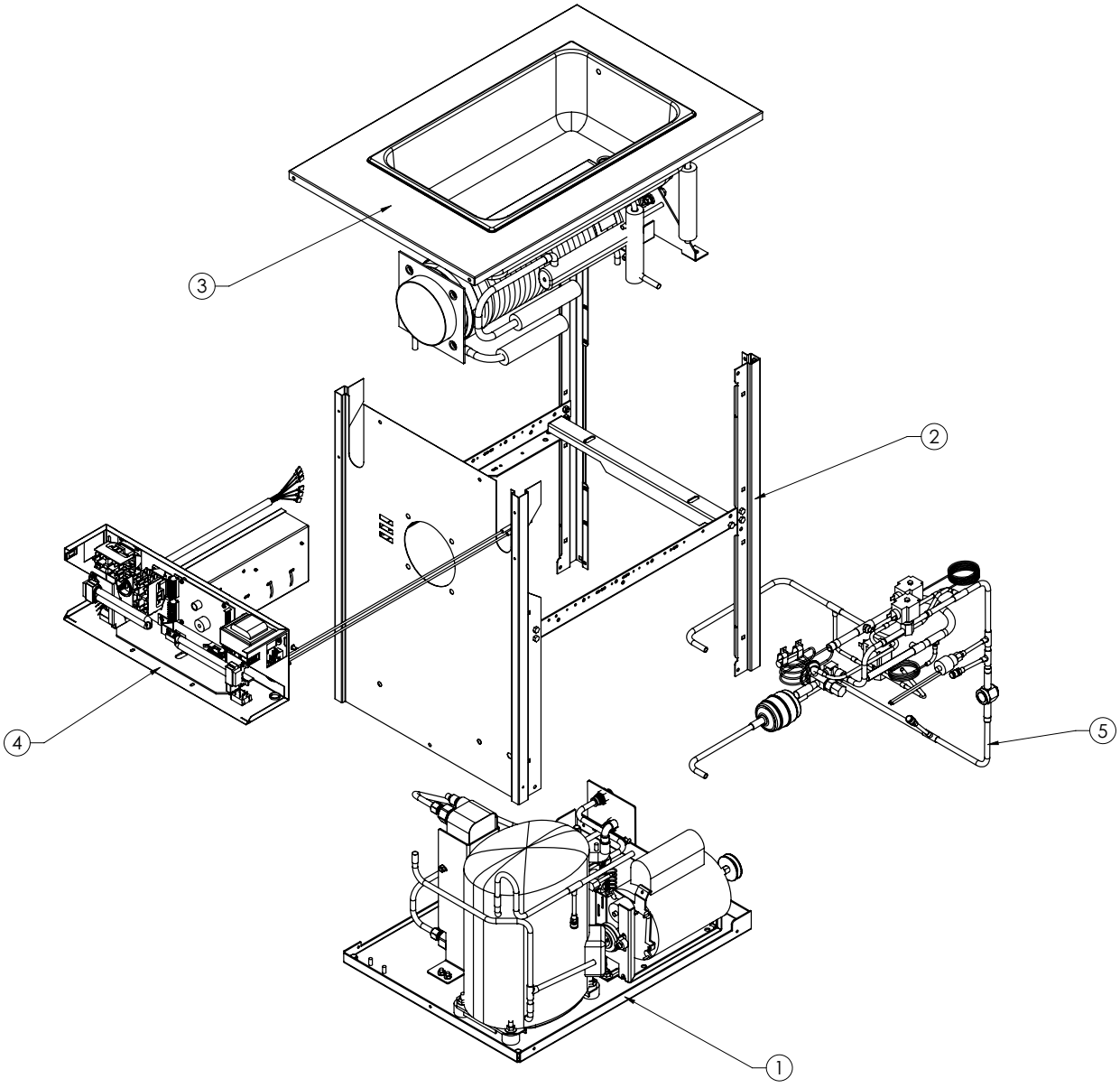

FILE NAME: W0159049.SLDDRW

ITEM NO.	PART NUMBER	DESCRIPTION	Default/QTY.
1	W0219021	Base Assy, 5711 Water	1
2	W0211236	FRAME ASSEMBLY , 5711	1
3	W0201280	EVAPORATOR ASSY, 5711	1
4	W0572756	Electrical Box Assembly, 5711-B & C	1
5	W0219022	Refrigeration Tube Assy - CFB5711-C	1

Exploded View Model 5711-A Stock Assembly (Spinners)

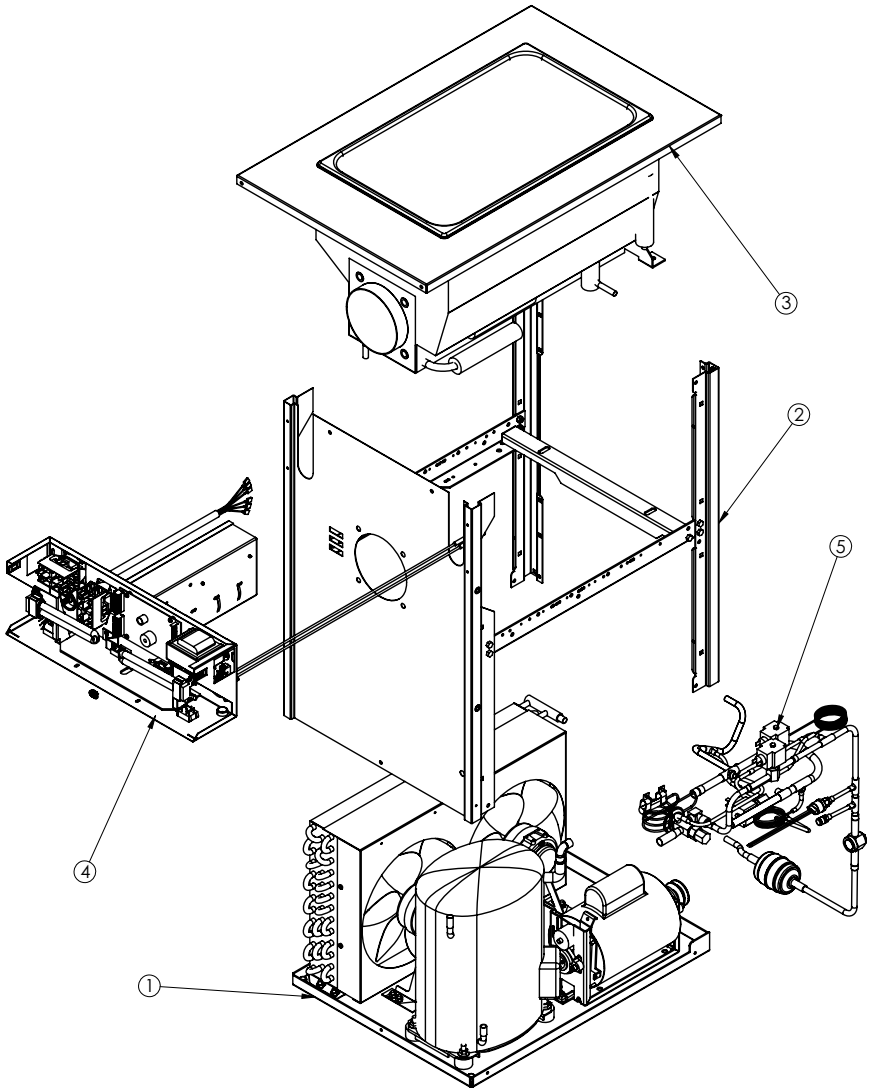

⋮NAME: W0151027.SLDDRW (SH2 5711 Expld Stck Asy Spinnr)

ITEM NO.	PART NUMBER	Title	Qty.
1	W0211235	Base Assy,5711	1
2	W0211217	FRAME ASSEMBLY, 5711	1
3	W0201280	EVAPAORATOR ASSY, 5711	1
4	W0572755	Electrical Box Assy. 5711-A	1
5	W0207198	Refrigeration Tube Assy.	1
6	W0620187	Bushing, 5/8ODx1/2ID Sleeve	1
7	W0620141	Fitting,1/2 C x 1/2 FTG,Elbow,Cu	1

Exploded View Model 5311 Base Assembly

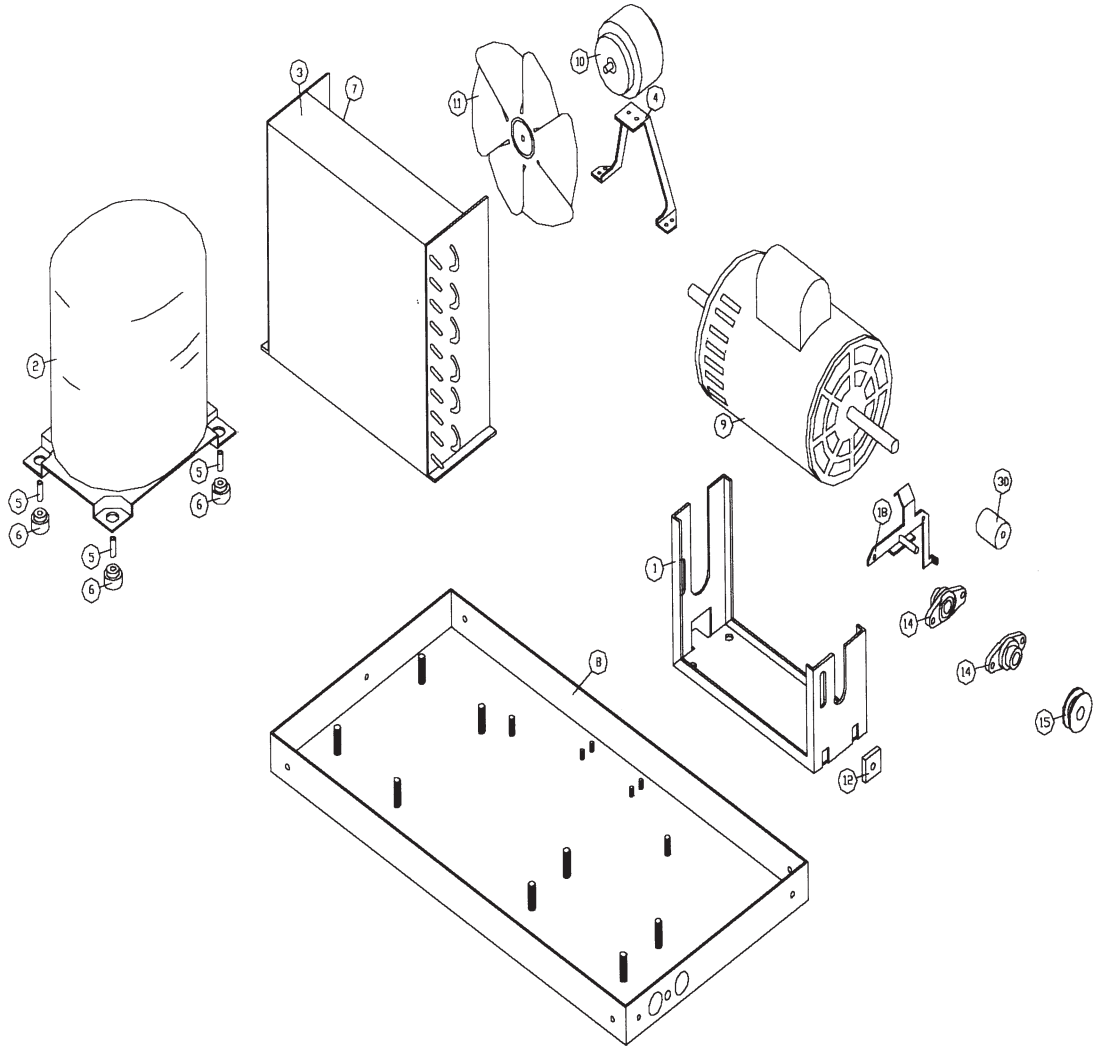

Item	Part Number	Description
1	W0210169	Motor Cradle
2	0W200123	Compressor
3	W0200256	Condenser
4	W0200411	Fan Mount Bracket
5	W0200412	Compressor Spacer
6	W0200413	Compressor Grommet
7	W0201079	Fan Shroud
8	W0210041	Frame Bottom Plate
9	W0320019	Drive Motor
10	W0320209	Fan Motor
11	W0320286	Fan Blade
12	W0321013	Motor Adj. Nut
14	W0380009	Flange Bearing

Item	Part Number	Description
15	W0450016	Pulley
16	W0610110	#8 X 3/8 Pan Hd..
17	W0610264	10-24 X 1/4 Truss Hd.
18	W0321025	Motor Stop Bracket
19	W0611055	10-24 Hex Nut
20	W0611074	1/4-20 Hex Nut
21	W0611082	5/16-18 Flange Nut
22	W0611235	3/16 Flat Washer
23	W0611246	1/4 Lockwasher
24	W0610657	5/16-18 X 1/2 Cap
25	W0611255	5/16 Split Washer
26	W1611005	1/4-20, NC, ESNA
30	W0340111	Isolation Bumper

Exploded View Model 5511 Base Assembly

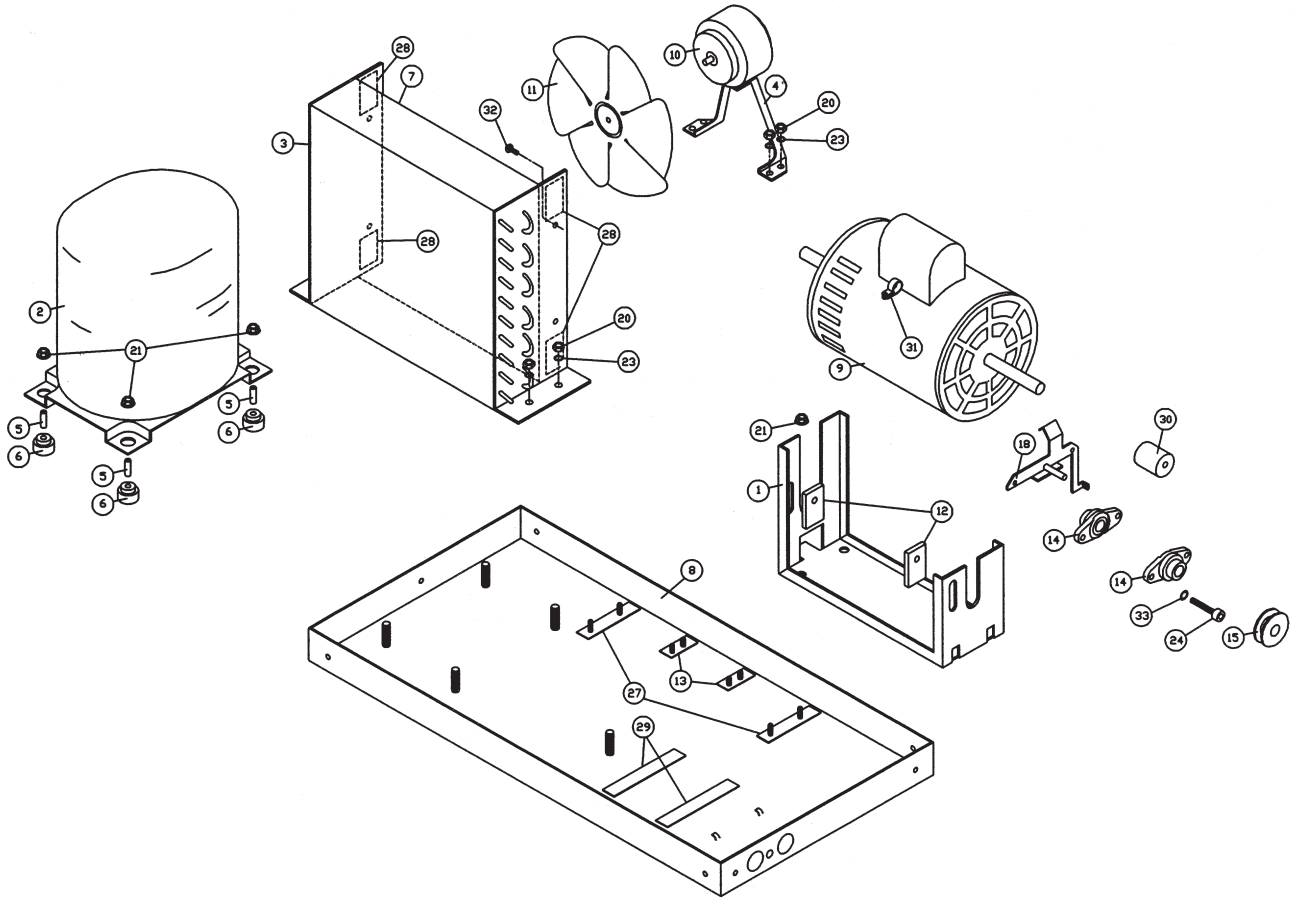

Item	Part Number	Description
1	W0210169	Motor Cradle
2	W0200133	Compressor
3	W0200256	Condenser
4	W0200411	Fan Mount Bracket
5	W0200412	Compressor Spacer
6	W0200413	Compressor Grommet
7	W0201079	Fan Shroud
8	W0210041	Frame Bottom Plate
9	W0320020	Drive Motor
10	W0320220	Fan Motor
11	W0320286	Fan Blade
12	W0321013	Motor Adj. Nut
13	W0671017	Sound Insulation (Fan)
14	W0380009	Flange Bearing
15	W0450016	Pulley
18	W0321025	Motor Stop Bracket
20	W0611074	1/4-20 Hex Nut
21	W0611082	5/16-18 Flange Nut
23	W0611246	1/4 Lock Washer
24	W0610657	5/16-18 x 1/2 Cap
27	W0671018	Sound Insulation (Cond)
28	W0671021	Sound Insulation (Shro)
29	W0671022	Sound Insulation (Motor)
30	W0340111	Isolation Bumper
31	W0630421	Nylon Cable Clamp
32	W0610559	Screw, 1/4-20 x 1 socket Hd. Cap
33	W0611248	Lock Washer, 1/4” Split z/p

5511-0107-021-5-15-00

Exploded View Model 5941 Base Assembly

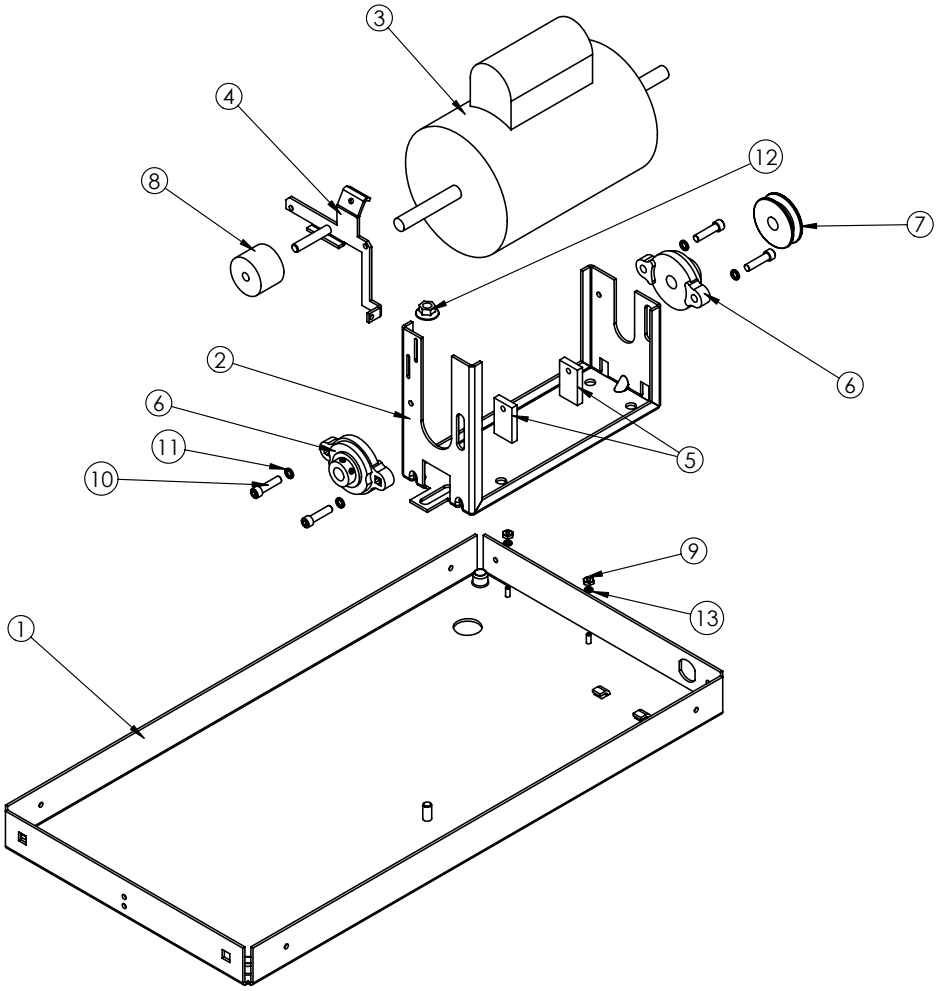

ITEM NO.	QTY.	PART NUMBER	DESCRIPTION
1	1	W0210044	BASE PAN ASSEMBLY
2	1	W0210169	CRADLE, MOTOR 3312/5311
3	1	W0320019	MOTOR, DRIVE DUAL CYCLE 1/2 HP
4	1	W0321025	Motor Stop Brkt Assy
5	2	W0321013	NUT, MOTOR ADJUSTMENT
6	2	W0380009	BEARING, 1" BORE FLANGE
7	1	W0450016	PULLEY, 0K7 X 1/2" BROWNING
8	1	W0340111	BUMPER, ZB-1214 MINOR RUBBER
9	2	W0611044	8-32 Hex Nut Z/P
10	4	W0610559	
11	4	W0611249	Washer, Split, Lock, Z/P
12	1	W0611082	NUT, 5/16-18 FLANGE, LARGE
13	2	61250	Washer, #8 Split Lock

Exploded View Model 5711 Base Assembly

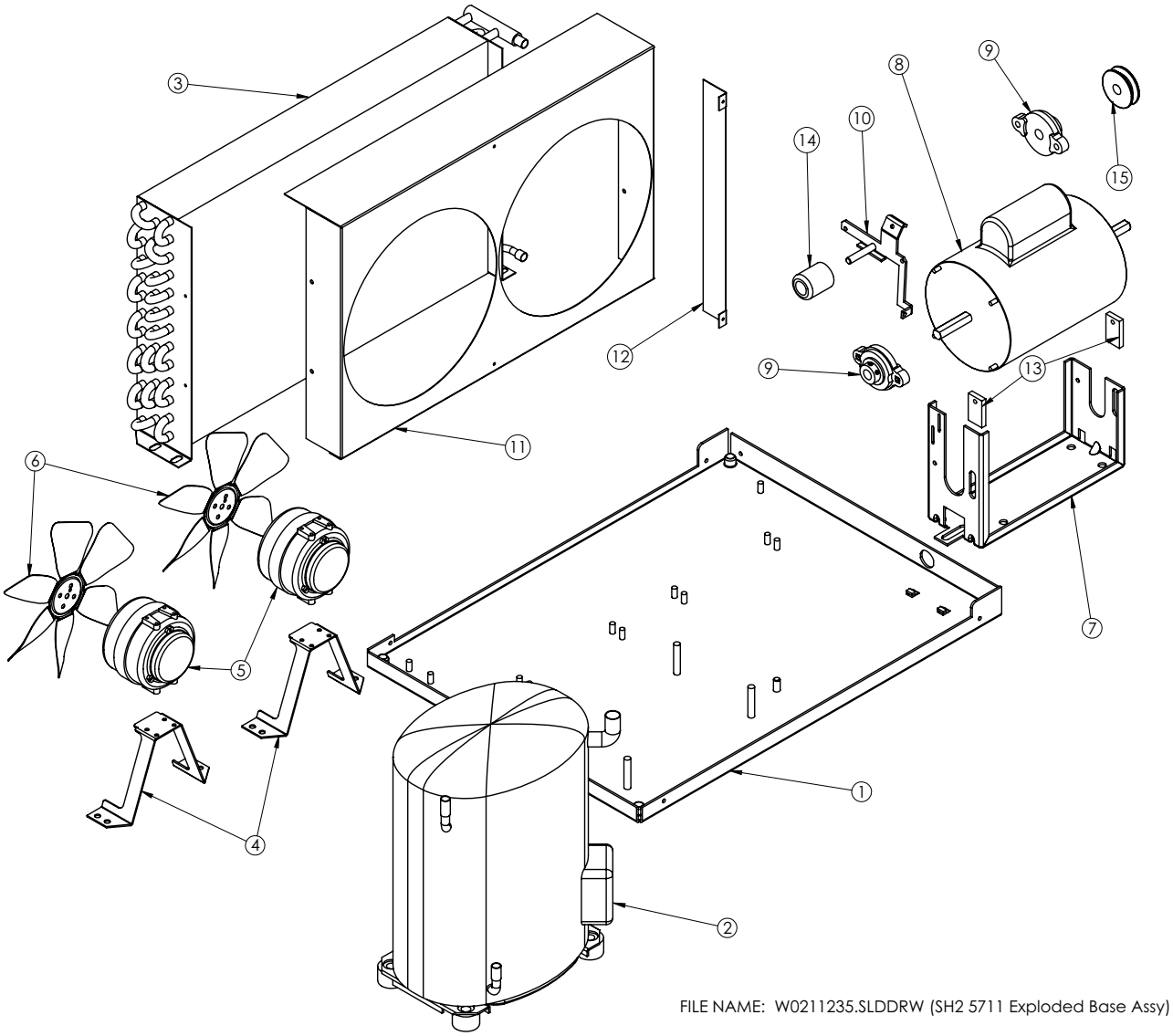

FILE NAME: W0211235.SLDDRW (SH2 5711 Exploded Base Assy)

ITEM NO.	PART NUMBER	Title	Qty.
1	W0210019	BASE PLATE ASSEMBLY	1
2	W0200424	COMPRSSR, 1 1/2 HP 230V	1
3	W0200257	Condenser, 5711	1
4	W0200411	Brkt,Fan Motor Mnt.	2
5	W0320220	Motor,Fan ESP-LD16EM1	2
6	W0320286	Fan Blade	2
7	W0210169	CRADLE, MOTOR 3312/5311	1
8	W0320020	MOTOR, DRIVE DUAL CYCLE 1/2 HP	1
9	W0380009	BEARING, 1" BORE FLANGE	2
10	W0321025	Motor Stop Brkt Assy	1
11	W0201058	SHROUD, CONDENSER 5711	1
12	W0201059	BAFFLE, SHROUD 5711	1
13	W0321013	NUT, MOTOR ADJUSTMENT	2
14	W0340111	BUMPER, ZB-1214 MINOR RUBBER	1
15	W0450016	PULLEY, 0K7 X 1/2" BROWNING	1

Exploded View Model 5711-C Base Assembly

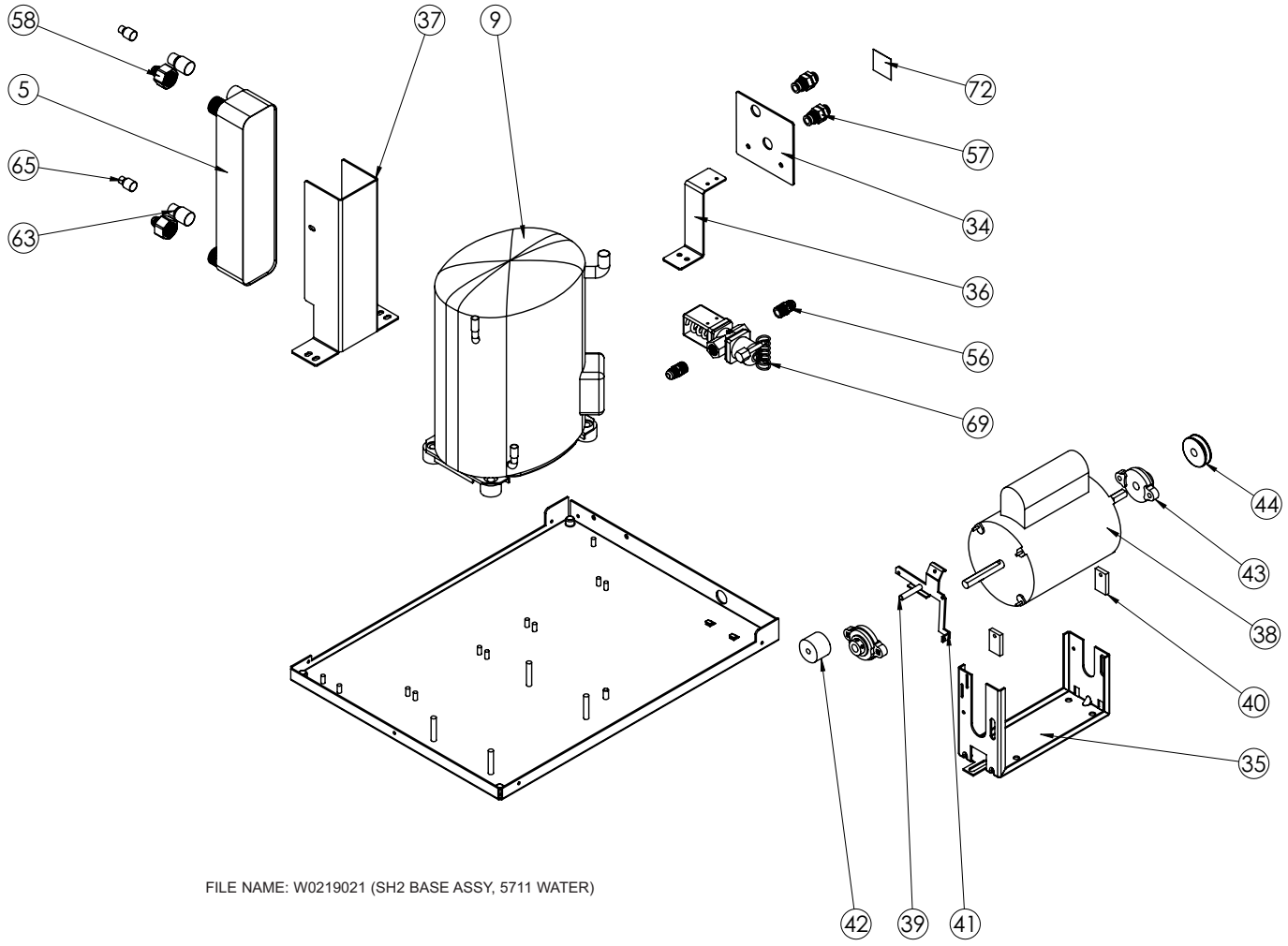

FILE NAME: W0219021 (SH2 BASE ASSY, 5711 WATER)

ITEM NO.	PART NUMBER	DESCRIPTION	QTY
4	W0219021	Base Assy, 5711 Water	1
5	W0200255	Condenser Water Cooled	1
9	W0200424	COMPRSSR, 1 1/2 HP 230V	1
34	W0210051	Water Line Support Bracket	1
35	W0210169	Motor Cradle	1
36	W0219019	Bracket Inlet Valve	1
37	W0219020	Mount Water Condenser	1
38	W0320020	MOTOR, DRIVE DUAL CYCLE 1/2 HP	1
39	W0321005	Pin,Motor Stop	1
40	W0321013	NUT, MOTOR ADJUSTMENT	2
41	W0321031	Motor Stop Bracket	1
42	W0340111	BUMPER, ZB-1214 MINOR RUBBER	1
43	W0380009	1/2" Flange Bearing	2
44	W0450016	1/2" ID X 1.7 Dia. Motor Pulley	1
56	W0620034	Union 3/8 MPT x 3/8 Flare Brass	2
57	W0620036	Fitting, 3/8, Bulkhead, Prestolok	2
58	W0620053	3/4 FPT x 3/8 Brass Flare	2
63	W0620138	Coupling, Copper, 3/4 x 1/2	2
65	W0620446	Coupling, Copper, 1/2 x 1/4	2
69	W0650602	Valve Water Regulating	1
72	W0600340	LABEL, INLET/OUTLET	1

5311 Base Assembly Refrigeration

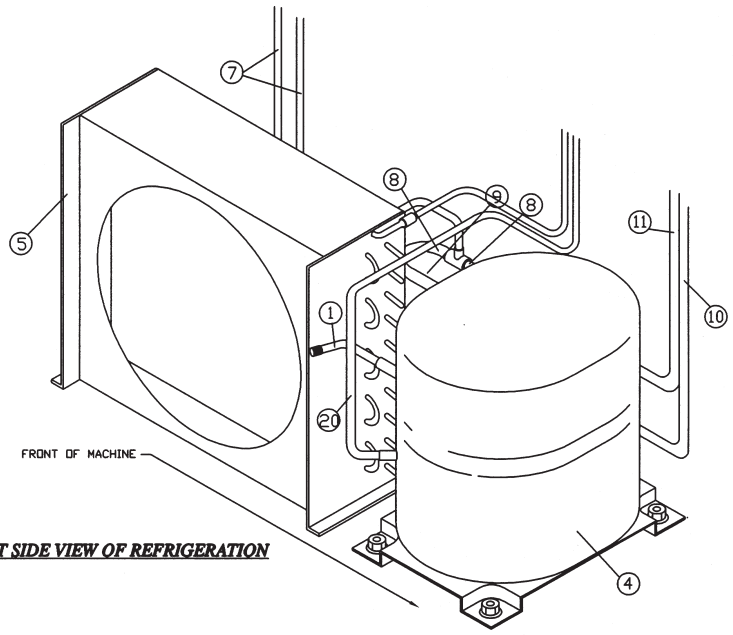

RIGHT SIDE VIEW OF REFRIGERATION

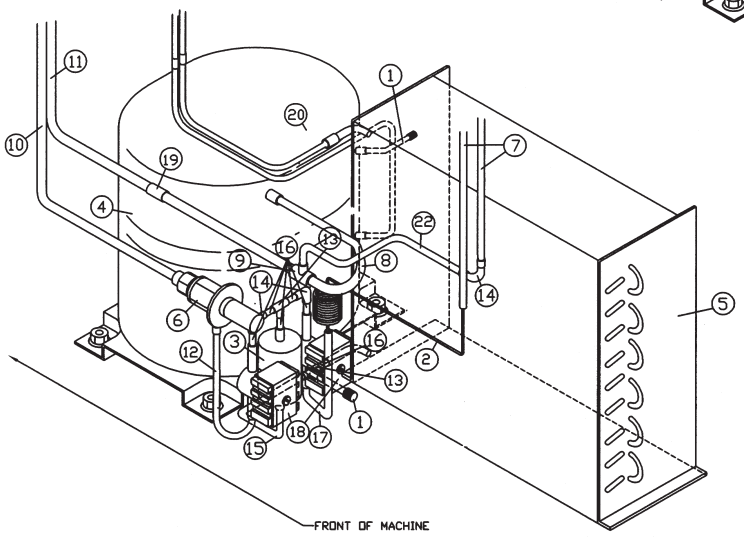

LEFT SIDE VIEW OF REFRIGERATION

Item	Part Number	Description
1	W0650501	Access Valve
2	W0200314	Capillary Tube, .042 x 12 Ft.
3	W0650112	Filter Drier
4	W0200123	Compressor
5	W0200256	Condenser
6	W0650104	Automatic Expansion Valve
7	W0201120	Hopper Coolant Lines
8	W0201331	Suction Line
9	W0620109	3/8" x 3/8" x 1/4" Tee
10	W0201114	Evaporator Line
11	W0201113	Suction Line
12	W0201323	Exp. Valve Solenoid Coolant Line
13	W0620102	1/4" x 1/4" x 1/4" Tee
14	W0620110	1/4" Copper Elbow
15	W0201324	Filter/Condenser Coolant Line
16	W0201325	Coolant Line
17	W0201326	Solenoid/Cap Tube Line
18	W1650002	Solenoid Valves
19	W0620103	3/8" Straight Couple
20	W0201039	Compressor/Condenser Hot Gas Line

5311-105-021-4-29-00

5511 Base Assembly Refrigeration

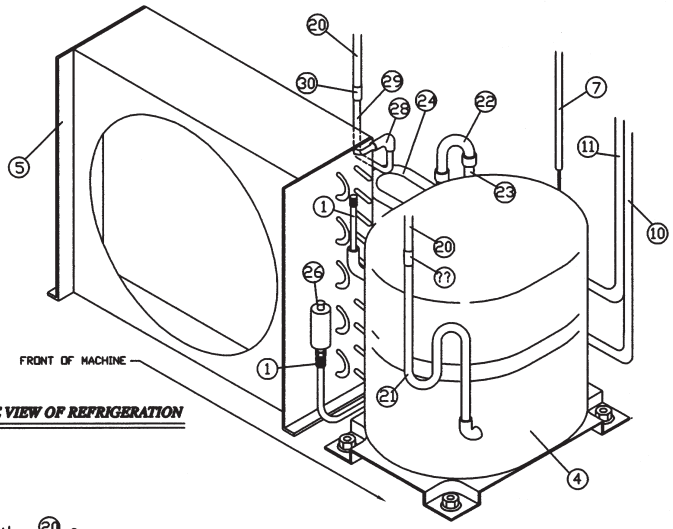

RIGHT SIDE VIEW OF REFRIGERATION

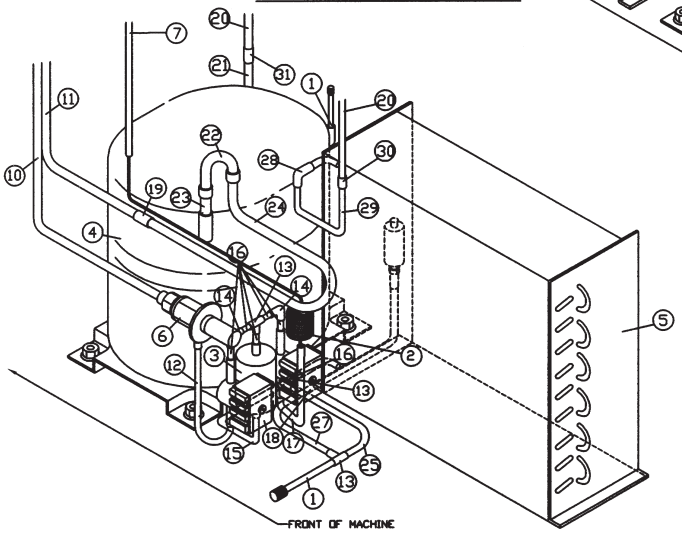

LEFT SIDE VIEW OF REFRIGERATION

Item	Part Number	Description
1	W0650501	Access Valve
2	W0200301	Capillary Tube
3	W0650112	Filter Drier
4	W0200133	Compressor
5	W0200256	Condenser
6	W0650107	Automatic Expansion Valve
7	W0201120	Hopper Coolant Lines
10	W0201114	Evaporator Line
11	W0201113	Suction Line
12	W0201323	Exp. Valve/Solenoid Liquid Line
13	W0620102	1/4" x 1/4" x 1/4" Tee
14	W0620110	1/4" Copper Elbow
15	W0201324	Filter/Condenser Coolant Line
16	W0201325	Condenser To Tee Liquid Line
17	W0201326	Solenoid/Cap Tube Liquid Line
18	W1650002	Solenoid Valves
19	W0620125	1/2" Straight Coupling
20	W0201112	Barrel Warmer
21	W0201371	Compress./Condenser Hot Gas Line
22	W0620123	1/2" 180 Deg. Copper Fitting
23	W0201372	Suction Line (Short)
24	W0201373	Suction Line (Bent)
25	W0201155	Liquid Line
26	W0650428	High Pressure Cutout Switch
27	W0201220	Liquid Line
28	W0201153	1/4 OD x 3/8 ID 90Þ Bell Reducer
29	W0201151	3/8" Dia Condenser Connection
30	W0620112	3/8" Coupling
31	W0201152	5/16 ID x 3/8 ID Straight Coupling

5511-0108-021-3-20-00

5941 Base Assembly Refrigeration

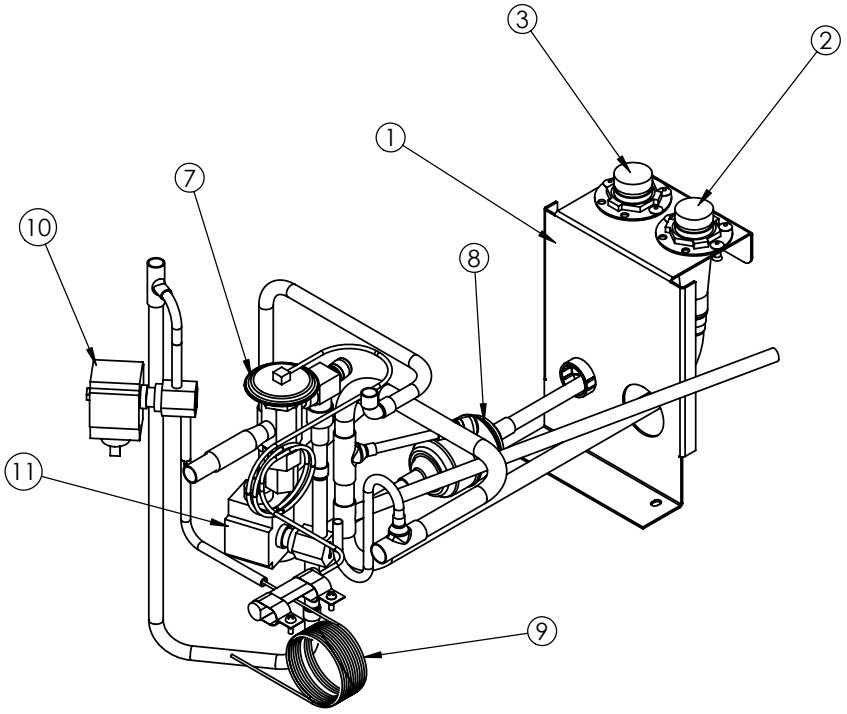

ITEM NO.	QTY.	PART NUMBER	DESCRIPTION
1	1	100280	BRACKET, MOUNTING, QD 5931
2	1	W0620118 male	Quick Disconnect, Male Portion
3	1	W0620117 male	Quick Disconnect, Male Portion
7	1	W0650125	VALVE, THERM EXP, 3/8 X 1/2 ODF, 30" CAP
8	1	W0200312	DRIER, FILTER SPORLAN #C-033-S
9	1	W0200318	Tube, Capillary .072 OD x .026 ID x 132"
10	1	W1650002	SOLENOID, COMP E5S120S-24/50
11	1	W1650005	SOLENOID, COMP E5S130S-24/50

Model 5711 Refrigeration Tube Assembly

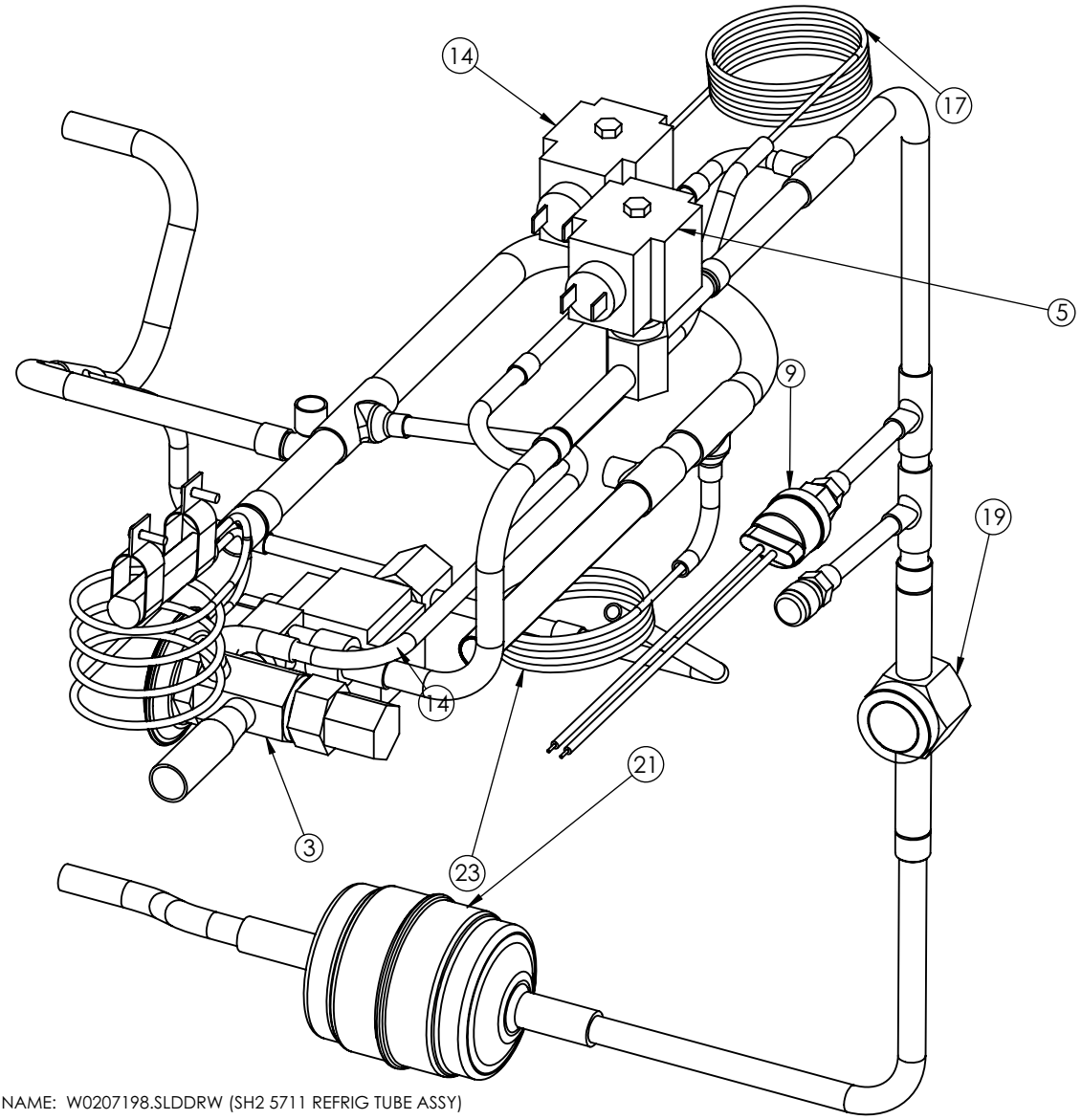

FILE NAME: W0207198.SLDDRW (SH2 5711 REFRIG TUBE ASSY)

ITEM NO.	PART NUMBER	DESCRIPTION	Qty.
3	w0650125	VALVE, THERM EXP, 3/8 X 1/2 ODF, 30" CAP	1
5	W1650005	SOLENOID, COMP E5S130S-24/50	1
9	W0620431	Switch,Pressure,5711	1
14	W1650002	SOLENOID, COMP E5S120S-24/50	2
17	W0200323	Cap Tube, .087 OD x .042 ID x 56.250"	1
19	W0200321	Sight Glass,Refrig.,3/8	1
21	W0207176	Drier, 3/8 Filter	1
23	W0200322	Tube, Capillary .106 OD x .056 ID x 33"	1
25	W0620112	ELBOW, 3/8 C x3/8 C	1

Exploded View Probe Assembly

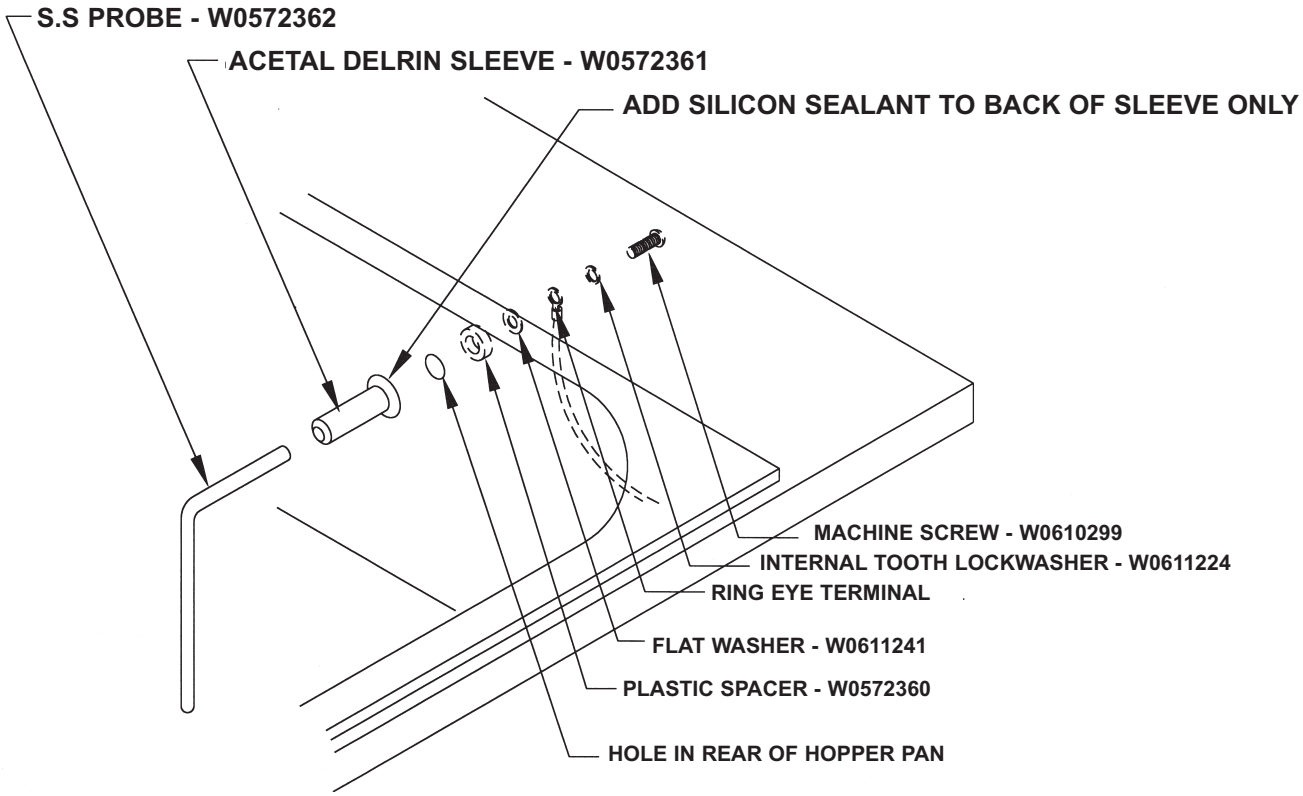

CRATHCO MACHINE ASSEMBLY

CHECK LIST

Do not cover ventilation grill on sides of machine.
Read equipment instructions before handling parts.

- ☐ 1 Stationary Seal Rubber Part
- ☐ 2 Stationary Seal Ring
- ☐ 3 Spring Seal

Coconut Oil Seal (W0340210) includes 1,2,& 3. Optional Standard Seal (W0340201) also viewed as 1,2,& 3.

- ☐ 4 Dasher (W0430089)
- ☐ 5 Plastic Rear Bearing (W0430024)
- ☐ 6a Plastic Front Bearing Standard (W0430032)
- ☐ 6b Plastic Front Bearing Coconut (W0430033)
- ☐ 7 Stator Rod (W0430028)
- ☐ 8 Face Plate Quad Ring (W0340055)
- ☐ 9 Valve Body (W0480450)
- ☐ 10 Valve Knobs (W0630711)
- ☐ 11a 5000 Series Standard Product Plunger (W0480462)
- ☐ 11b 5000 Series Thick Product Plunger (W0480463)
- ☐ 12 Plunger O-Rings (W0340022)
- ☐ 13 Plunger Spring (W0631230)
- ☐ 14 Valve Pin (W0611728)
- ☐ 15 Valve Handle (W0480445)
- ☐ 16 Scraper Blade (W1431084)
- ☐ 17a Slush Cocktail Carb Tube Assy. (W0471075)
- ☐ 17b Optional Smoothie/ Shake (W0471128)
- ☐ 18a Sleeve O'Ring (W0340012)
- ☐ 18b Carburetor O-Rings (W0340011)
- ☐ 19 Optional Smoothie/ Shake Carburetor Sleeve. (W0471134)

Optional Smoothie/Shake Carburetor comes together as a Kit, using Part numbers, 17b, 18a, 18b, & 19.

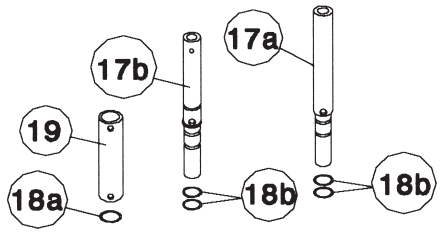

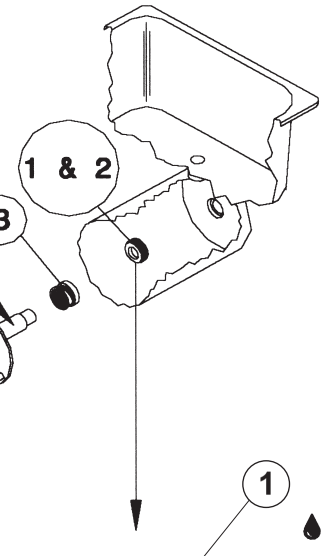

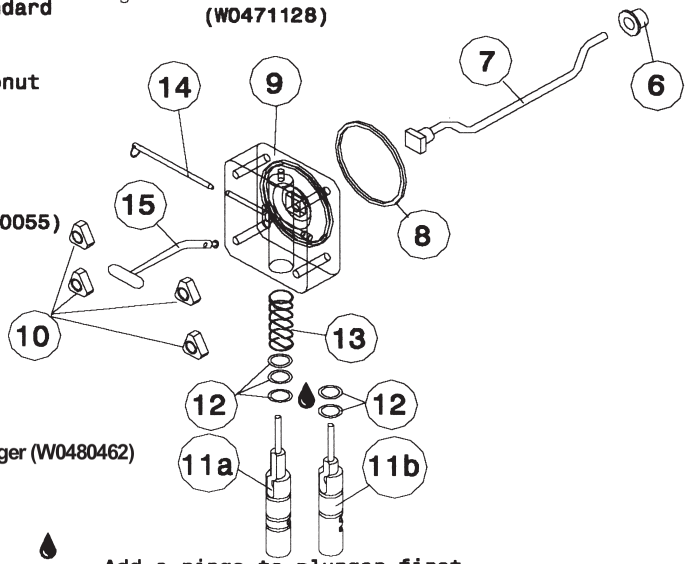

Add o-rings to plunger first, then lubricate plunger and o-rings.

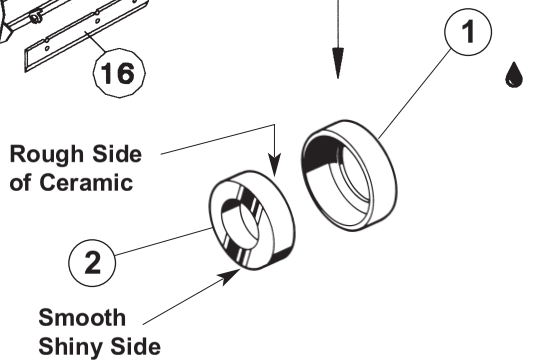

Assemble first, lubricate, then insert into freezing cylinder.

= Lubricate

5311 Electrical Components

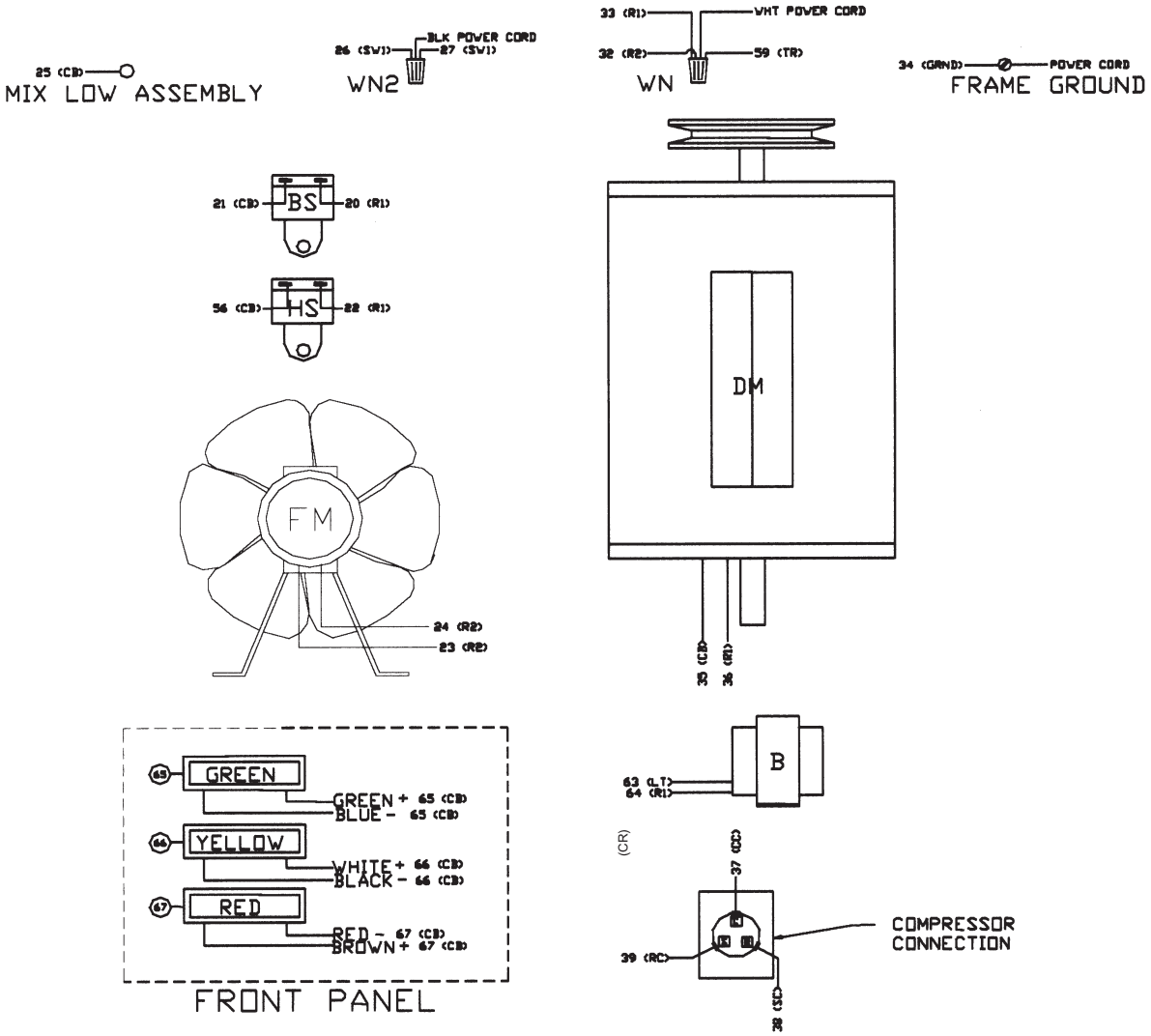

Item	Part Number	Description
HS	W1650004	HOPPER SOLENOID
LBS & RBS	W1650004	BARREL SOLENOID
FU	WI570616	FUSE HOLDER
FM	W0320209	FAN MOTOR
DM	W0320019	DRIVE MOTOR
101	W0570712	POWER CORD
100	W0570935	SERVE SWITCH
R1	W0570655	DRIVE MOTOR CONTACTOR
R2	W0570655	COMPRESSOR CONTACTOR
TR	W0570659	TRANSFORMER
SW2	W0570939	MODE SWITCH
SC	W0570603	START CAPACITOR
RC	W0570617	RUN CAPACITOR
CR	W0570693	COMPRESSOR RELAY
SW1	W0570934	ON/OFF SWITCH
FU2	W0570823	3.2 AMP FUSE
CB1	W0650913	CIRCUIT BOARD
FU1	W0570842	5.0 AMP FUSE
B	W0570045	BALLAST
LT1	W0570043	FLUORESCENT BULB
LT1	W0570044	LIGHT SOCKET
TB1	W0570235	CIRCUIT TERMINAL BLOCK
66	W1570010	YELLOW INDICATOR LIGHT
67	W1570011	RED INDICATOR LIGHT
65	W1570012	GREEN INDICATOR LIGHT

5511 Electrical Components

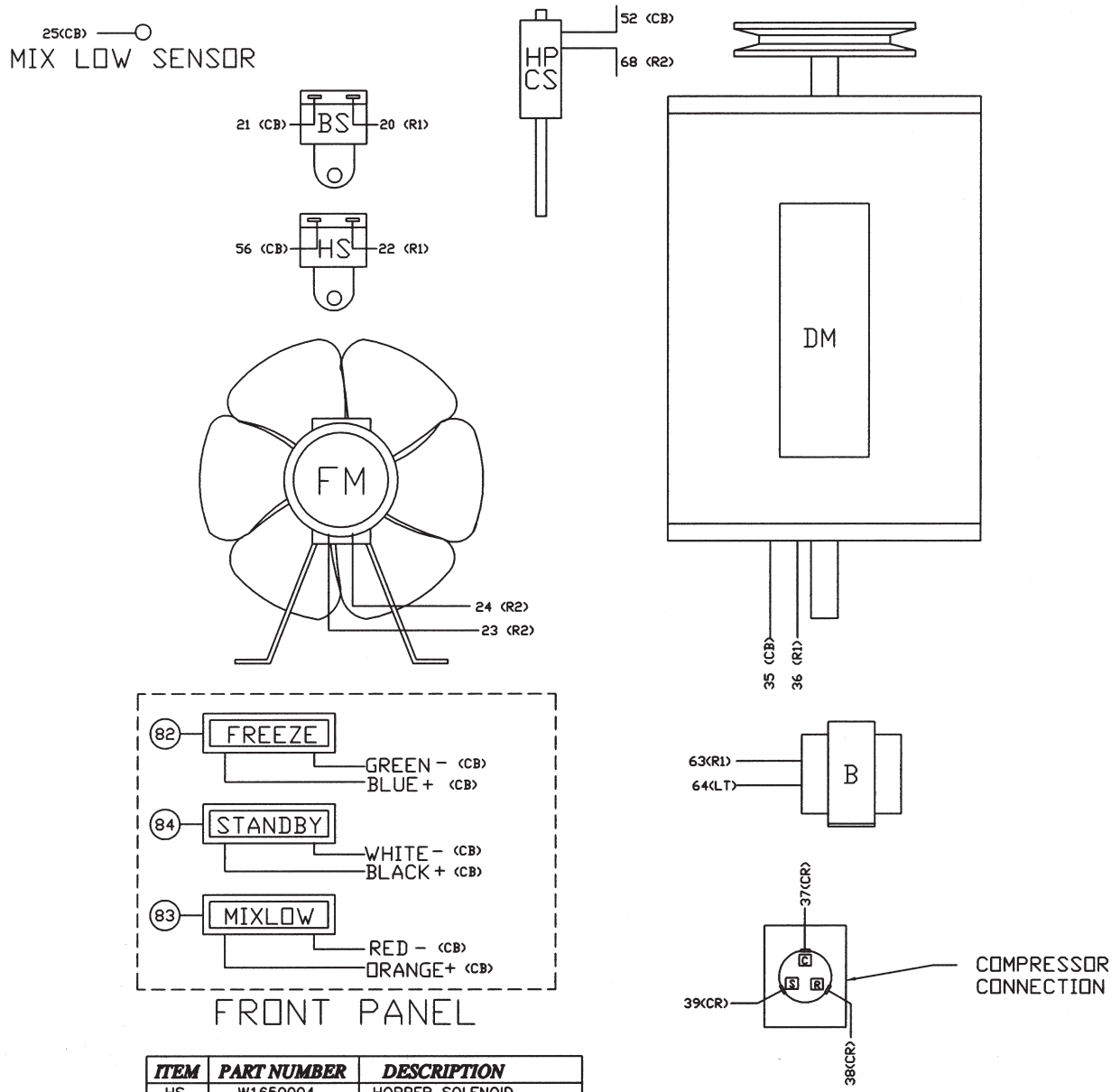

ITEM	PART NUMBER	DESCRIPTION
HS	W1650004	HOPPER SOLENOID
BS	W1650004	BARREL SOLENOID
FU	W1570616	FUSE HOLDER
FM	W0320220	FAN MOTOR
DM	W0320020	DRIVE MOTOR
101	W0570712	POWER CORD
100	W0570916	SERVE SWITCH
R1	W0570655	CONTACTOR, DRIVE MOTOR
R2	W0570655	CONTACTOR, COMPRESSOR
TR	W0570659	TRANSFORMER
SW2	W0570901	MODE SWITCH
SC	W0570619	START CAPACITOR
RC	W0570617	RUN CAPACITOR
CR	W0570638	COMPRESSOR RELAY
SW1	W0570912	ON/OFF SWITCH
FU2	W0570823	3.2 AMP FUSE
CB	W0650913	CIRCUIT BOARD
FU1	W0570842	5.0 AMP FUSE
B	W0570045	BALLAST
LT	W0570043	FLOURESCENT BULB
LT	W0570044	LIGHT SOCKET
HPCS	W0650428	HI PRESS. CUTOUT SWITCH
84	W1570010	STANDBY INDICATOR LIGHT
83	W1570011	MIX LOW INDICATOR LIGHT
82	W1570012	FREEZE INDICATOR LIGHT

5511-0102-057-3-20-00

5711 Electrical Components

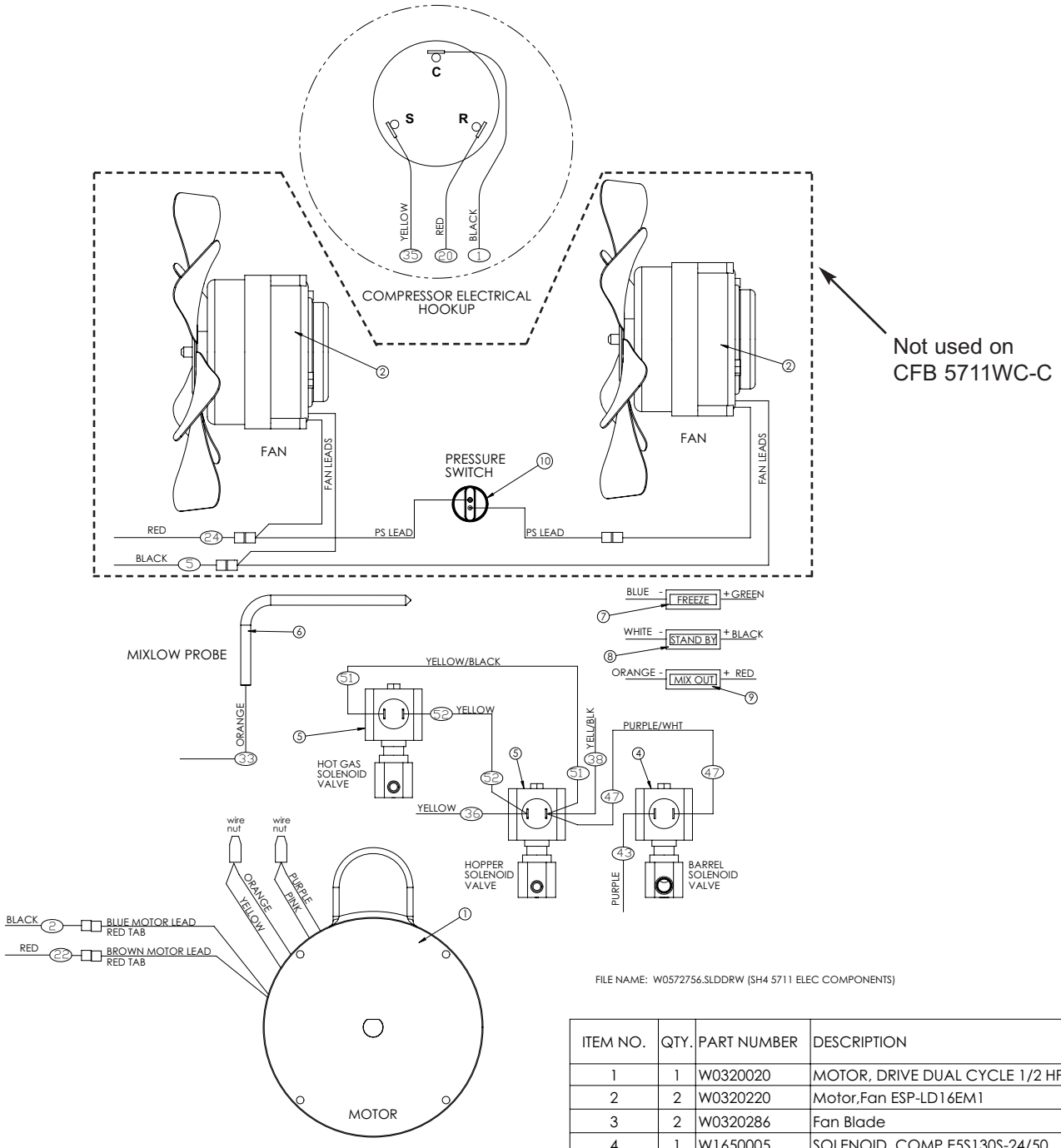

FILE NAME: W0572756.SLDDRW (SH4 5711 ELEC COMPONENTS)

ITEM NO.	QTY.	PART NUMBER	DESCRIPTION
1	1	W0320020	MOTOR, DRIVE DUAL CYCLE 1/2 HP
2	2	W0320220	Motor,Fan ESP-LD16EM1
3	2	W0320286	Fan Blade
4	1	W1650005	SOLENOID, COMP E5S130S-24/50
5	2	W1650002	SOLENOID, COMP E5S120S-24/50
6	1	W0572362	Mix Low Probe
7	1	W1570012	LIGHT, INDICATOR GRN 12V LED
8	1	W1570010	LIGHT, INDICATOR DK AMBER 12V
9	1	W1570011	LIGHT, INDICATOR LT RED 12V
10	1	W0620431	Switch,Pressure,5711

5311 Front Electrical Box

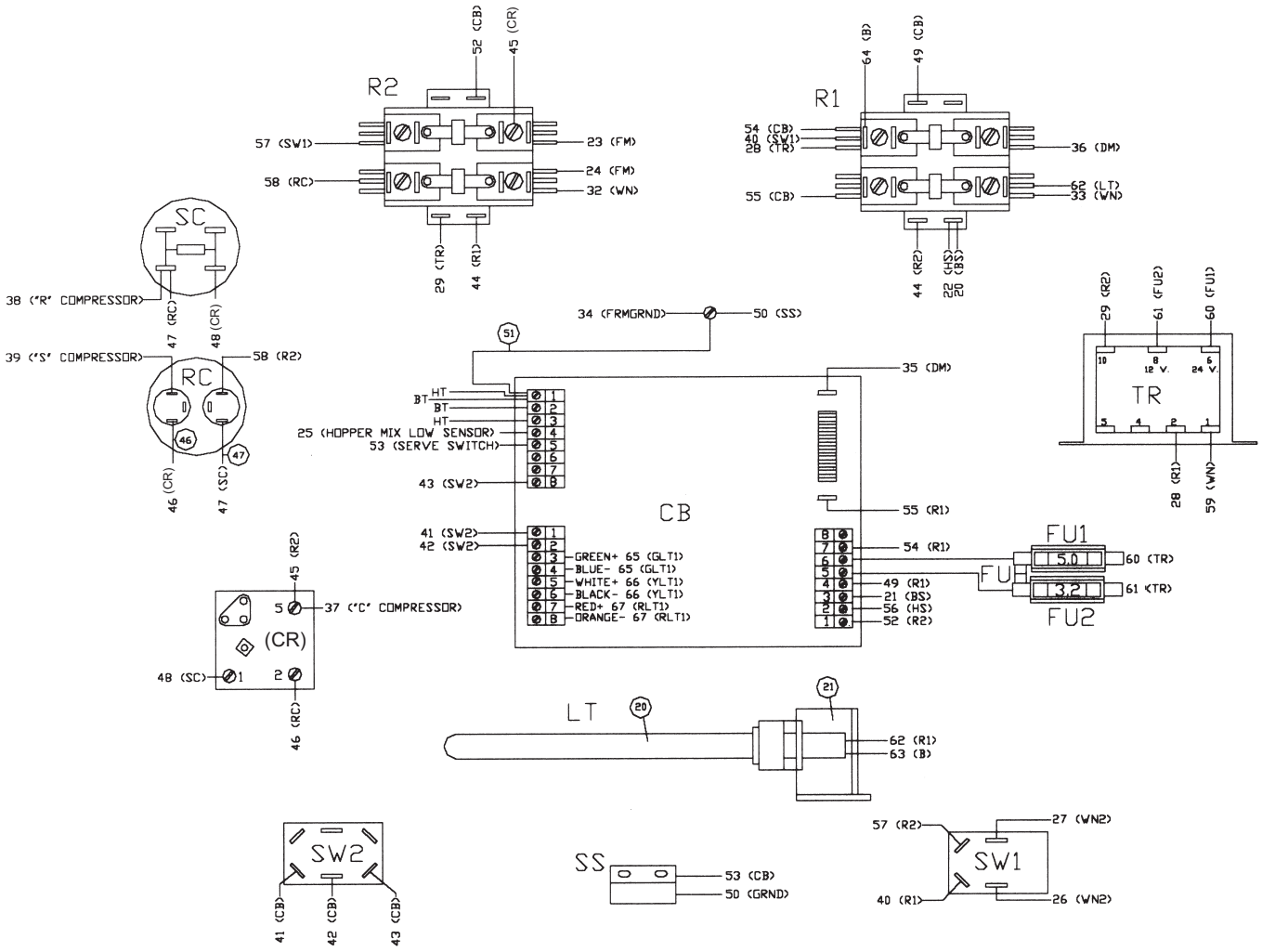

5511 Front Electrical Box

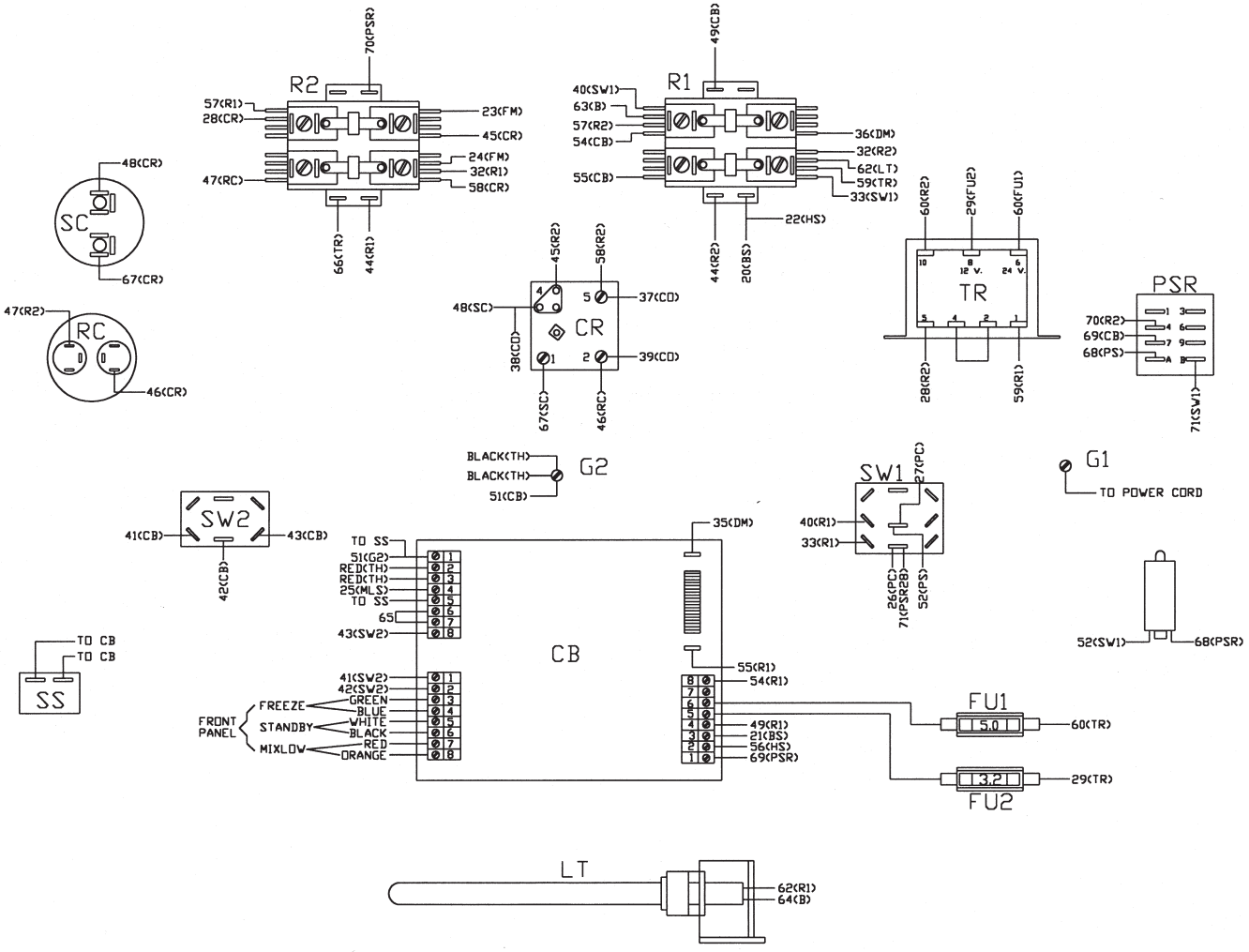

5511-0101-057-3-20-00

5711-B and -C Front Electrical Box

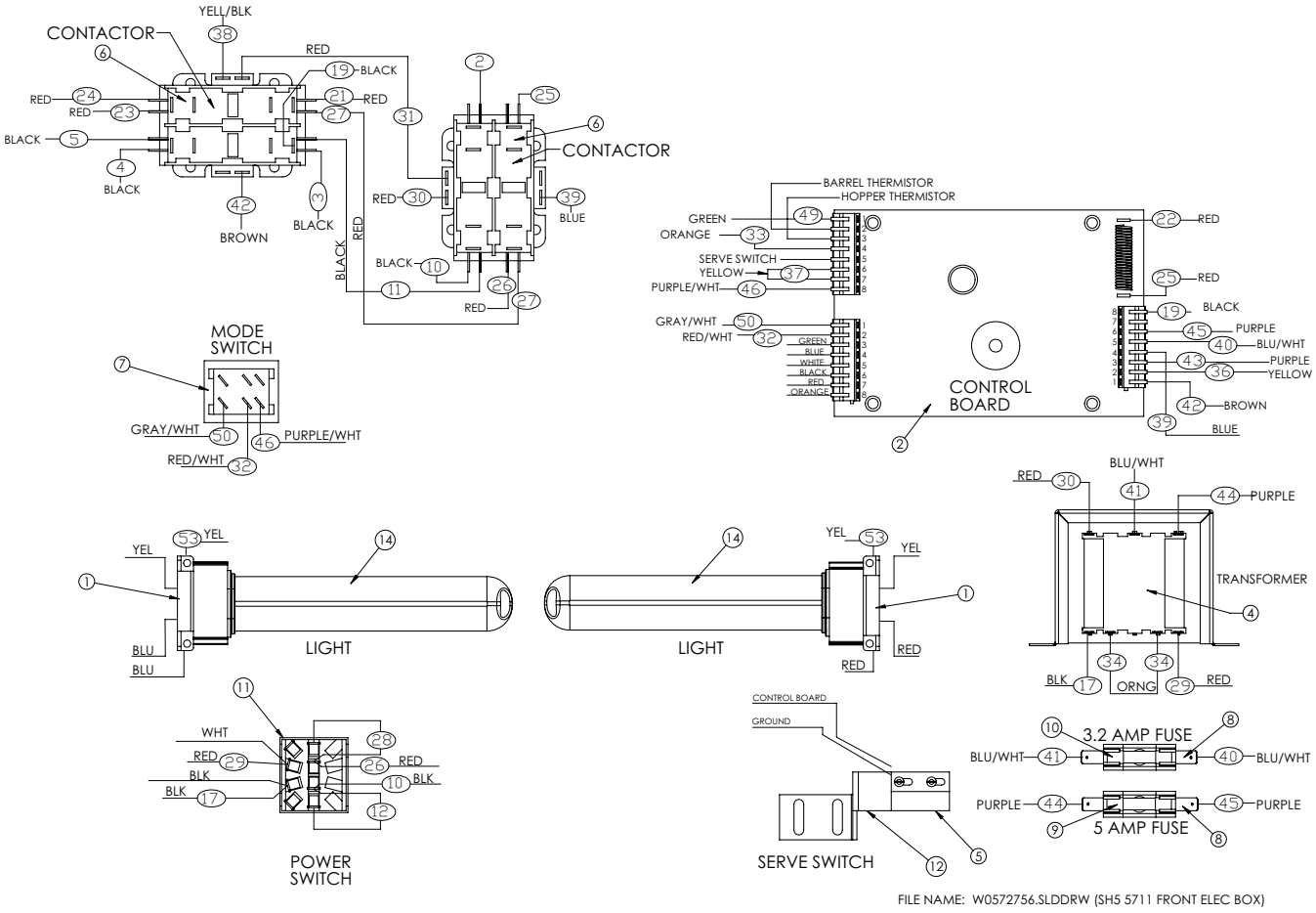

FILE NAME: W0572756.SLDDRW (SH5 5711 FRONT ELEC BOX)

ITEM NO.	QTY.	PART NUMBER	DESCRIPTION
1	2	W0570049	SOCKET, 4-PIN FLUORESCENT
2	1	w0650913	Control Board
4	1	W0570659	Transformer
5	1	W0570916	Reed Switch, N.O.
6	2	W0570655	Contactor, 24V Coil
7	1	W0570939	Mode Switch, 5512
8	2	w1570616	Fuse Block, 1/4"
9	1	w0570842	5.0 Amp Fuse
10	1	w0570823	3.2 Amp Fuse
11	1	w0570943	On/Off Switch, 5711
12	1	W0572709	BRACKET, SERVE SWITCH 5711
14	2	W0570050	BULB, 4-PIN FLUORESCENT

5711-A Front Electrical Box (Spinners)

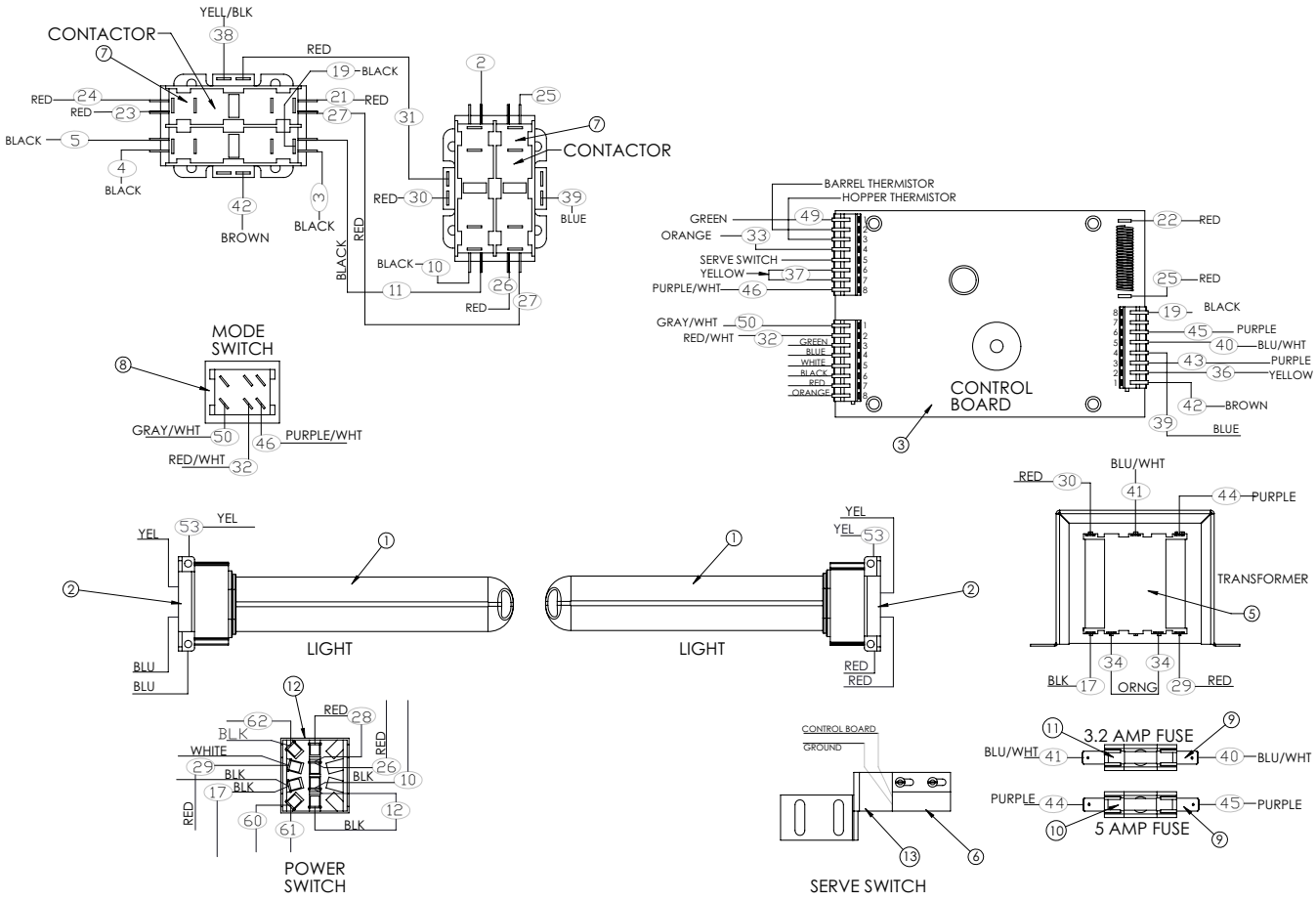

ITEM NO.	QTY.	PART NUMBER	DESCRIPTION
1	2	W0570050	BULB, 4-PIN FLUORESCENT
2	2	W0570049	SOCKET, 4-PIN FLUORESCENT
3	1	w0650913	Control Board
5	1	W0570659	Transformer
6	1	W0570916	Reed Switch, N.O.
7	2	W0570655	Contactor, 24V Coil
8	1	W0570939	Mode Switch, 5512
9	2	w1570616	Fuse Block, 1/4"
10	1	w0570842	5.0 Amp Fuse
11	1	w0570823	3.2 Amp Fuse
12	1	w0570943	On/Off Switch, 5711
13	1	W0572709	BRACKET, SERVE SWITCH 5711

5311 Electrical Box

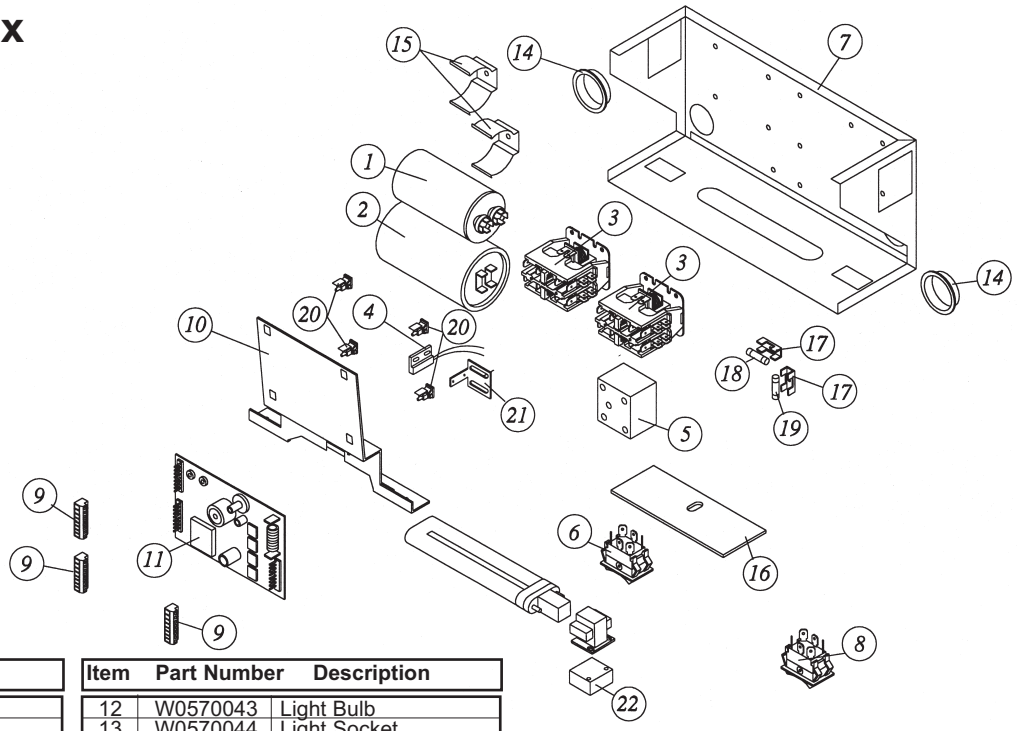

5311-0214-057-11-16-00

Item	Part Number	Description
1	W0570603	Start Capacitor
2	W0570617	Run Capacitor
3	W0570655	Contactor
4	W0570916	Reed Switch
5	W0570638	Compressor Relay
6	W0570934	On/Off Switch
7	W0572451	Electrical Box
8	W1570901	Mode Switch
9	W0570423	Terminal Strip
10	W0572342	Circuit Board Support
11	W0650913	Circuit Board

Item	Part Number	Description
12	W0570043	Light Bulb
13	W0570044	Light Socket
14	W0630006	Bushings
15	W0630811	Capacitor Clips
16	W0631629	Electrical Box Lens
17	W1570616	Fuse Block
18	W0570823	3.2 Amp Fuse
19	W0570842	5.0 Amp Fuse
20	W0630427	Edgemount Standoff
21	W0572704	Serve Switch Bracket
22	W0572705	Light Riser

5511 Electrical Box

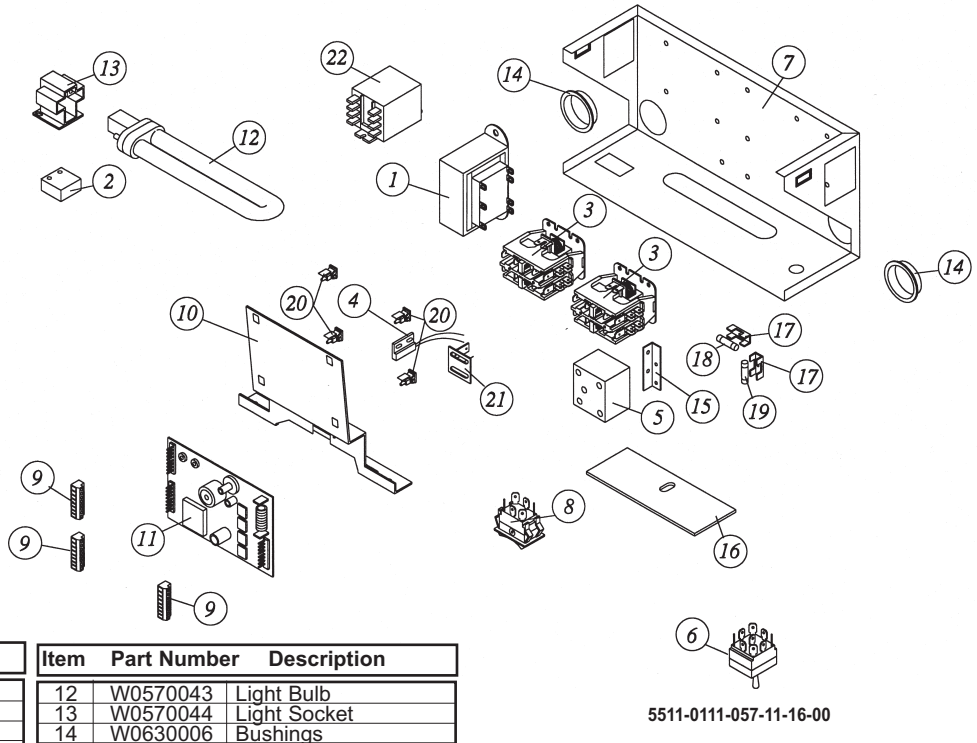

5511-0111-057-11-16-00

Item	Part Number	Description
1	W0570659	Transformer
2	W0572705	Light Riser
3	W0570655	Contactor
4	W0570916	Reed Switch
5	W0570618	Compressor Relay
6	W0570912	On/Off Switch
7	W0572464	Electrical Box
8	W1570901	Mode Switch
9	W1570213	Terminal Strip
10	W0572342	Circuit Board Support
11	W0650913	Circuit Board

Item	Part Number	Description
12	W0570043	Light Bulb
13	W0570044	Light Socket
14	W0630006	Bushings
15	W1571078	Relay Bracket
16	W0631633	Electrical Box Lens
17	W1570616	Fuse Block
18	W0570823	3.2 Amp Fuse
19	W0570842	5.0 Amp Fuse
20	W0630427	Edgemount Standoff
21	W0572704	Serve Switch Bracket
22	83106	Relay

5941 Electrical Box

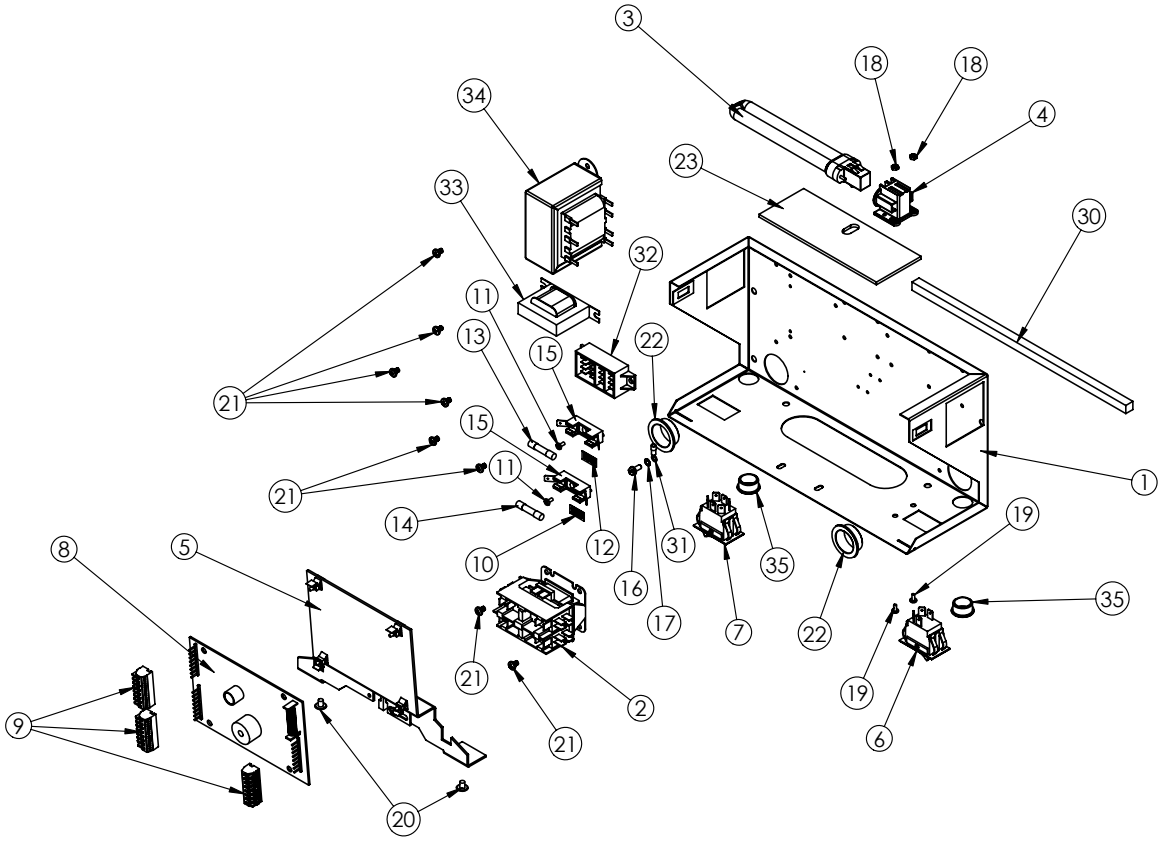

ITEM NO.	QTY.	PART NUMBER	DESCRIPTION
1	1	W0572451	Lighted Elec. Box 5311
2	1	W0570655.	Contactor, 24V Coil
3	1	W0570043	BULB,FLUORESENT
4	1	W0570044	SOCKET,LIGHT-LEVITON
5	1	W0572706	Control Board Mount Assembly
6	1	W0570934	Rocker Switch, DPDT
7	1	83231.	Rocker Switch, 3 Position
8	1	w0650913	Control Board
9	3	W0570214	Terminal Strip, 8 Position
10	1	W0600201	Decal, 3.2 Amp Fuse
11	2	83248	6-32 x 1/4 Screw
12	1	W0600202	Decal, 5.0 Amp Fuse
13	1	w0570842	5.0 Amp Fuse
14	1	w0570823	3.2 Amp Fuse
15	2	w1570616	Fuse Block, 1/4"
16	1	0076.	8-32 x 3/8 Hex Head Ground Screw
17	1	83151	Washer, Lock, #8, Ext. Tooth
18	2	86827	6-32 Hex Nut
19	2	w0610015	6-32 x 1/4 Screw
20	2	W0610264	SCREW, 10-24 X 1/4 TRUSS HD S.S.
21	8	W0610131	SCRW, 8-32 x 1/4, Self Thrd Ph
22	2	W0630006	Heyco Snap Bushing
23	1	W0631629	Lens, White, Elec. Box
30	1	101113	Seal, Electrical Box
31	1	101124	Ring Eye, Red, #8
32	1	W0570235	Terminal Block, 4 Circuit
33	1	W0570045	Ballast
34	1	W0570659	Transformer
35	2	88031	Heyco Snap Bushing

Exploded 5711-B and -C Electrical Box

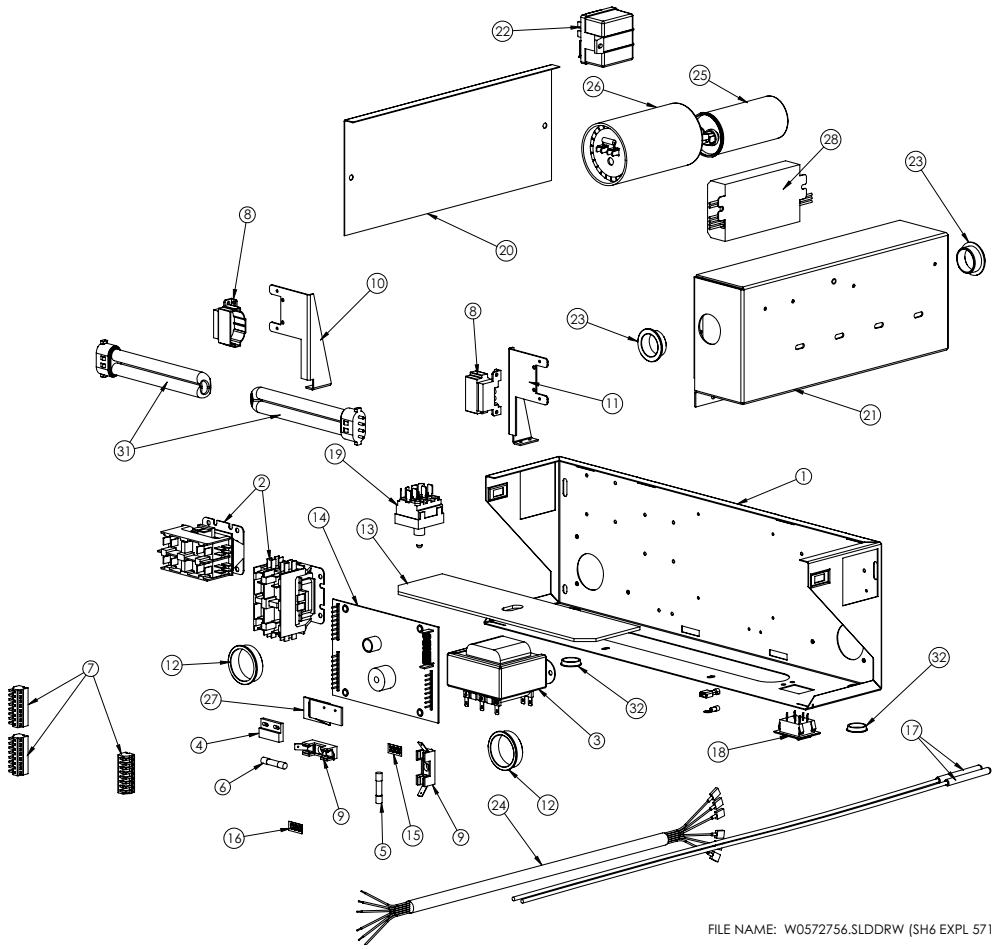

FILE NAME: W0572756.SLDDRW (SH6 EXPL 5711 ELECTRICAL BOX)

ITEM NO.	PART NUMBER	DESCRIPTION	Qty.
1	W0572465	Electrical Box, 5711	1
2	W0570655	Contactor, 24V Coil	2
3	W0570659	Transformer	1
4	W0570916	Reed Switch, N.O.	1
5	w0570823	3.2 Amp Fuse	1
6	w0570842	5.0 Amp Fuse	1
7	W0570213	Terminal Strip, 8 Position	3
8	W0570049	SOCKET, 4-PIN FLUORESCENT	2
9	w1570616	Fuse Block, 1/4"	2
10	w0572713	L.H. Light Brkt. 5711	1
11	w0572714	R.H. Light Brkt. 5711	1
12	W0630008	Heyco Snap Bushing	2
13	W0631637	Electrical Box Lens, 5711	1
14	w0650913	Control Board	1
15	W0600201	Decal, 3.2 Amp Fuse	1
16	W0600202	Decal, 5.0 Amp Fuse	1
17	W0570504	Probe, Thermister	2
18	W0570939	Mode Switch, 5512	1
19	w0570943	On/Off Switch, 5711	1
20	W0575066	Cover,Cap/Relay Box,5711	1
21	W0575065	Box,Cap/Relay,5711	1
22	W0570611	Relay,Compressor,5711	1
23	W0630006	Heyco Snap Bushing	2
24	W0572121	HARNESS, CABLE ASSY 5711	1
25	W0570610	Capacitor,Run,5711	1
26	w0570609	Start Capacitor,5711	1
27	W0572709	BRACKET, SERVE SWITCH 5711	1
28	W0570059	BALLAST, 120-277V 50/60Hz	1
29	70426	TERM, 1/4F INS QD 18-22 GA	2
30	101124	Ring Eye, Red, #8	1
31	W0570050	BULB, 4-PIN FLUORESCENT	2
32	61743	Heyco Shorty Plug	2

Exploded 5711-A Electrical Box (Spinners)

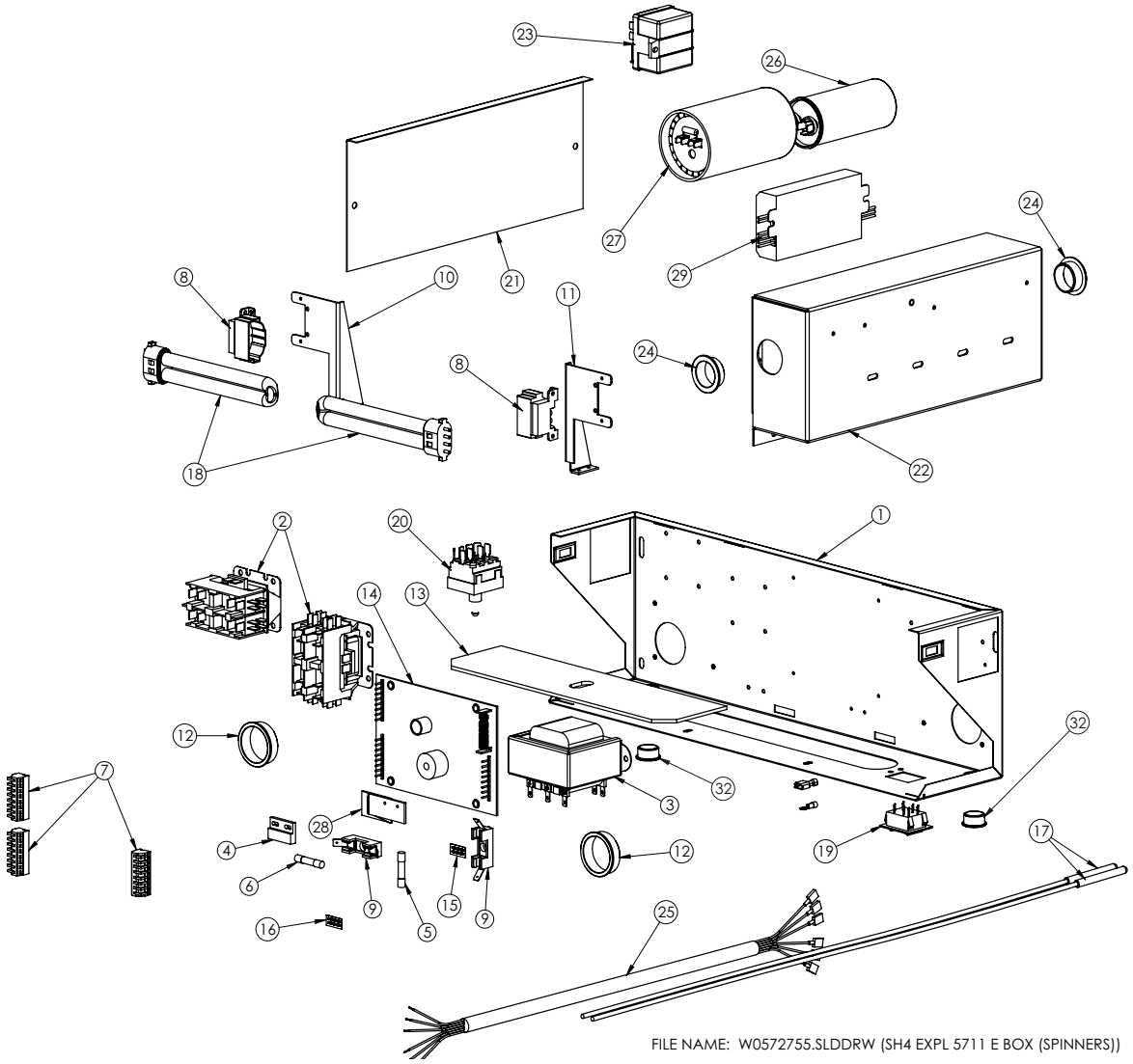

FILE NAME: W0572755.SLDDRW (SH4 EXPL 5711 E BOX (SPINNERS))

ITEM NO.	PART NUMBER	DESCRIPTION	Qty.
1	W0572465	Electrical Box, 5711	1
2	W0570655	Contactor, 24V Coil	2
3	W0570659	Transformer	1
4	W0570916	Reed Switch, N.O.	1
5	w0570823	3.2 Amp Fuse	1
6	w0570842	5.0 Amp Fuse	1
7	W0570213	Terminal Strip, 8 Position	3
8	W0570049	SOCKET, 4-PIN FLUORESCENT	2
9	w1570616	Fuse Block, 1/4"	2
10	w0572713	L.H. Light Brkt. 5711	1
11	w0572714	R.H. Light Brkt. 5711	1
12	W0630008	Heyco Snap Bushing	2
13	W0631637	Electrical Box Lens, 5711	1
14	w0650913	Control Board	1
15	W0600201	Decal, 3.2 Amp Fuse	1
16	W0600202	Decal, 5.0 Amp Fuse	1
17	W0570504	Probe, Thermister	2
18	W0570050	BULB, 4-PIN FLUORESCENT	2
19	W0570939	Mode Switch, 5512	1
20	w0570943	On/Off Switch, 5711	1
21	W0575066	Cover,Cap/Relay Box,5711	1
22	W0575065	Box,Cap/Relay,5711	1
23	W0570611	Relay,Compressor,5711	1
24	W0630006	Heyco Snap Bushing	2
25	W0572121	HARNESS, CABLE ASSY 5711	1
26	W0570610	Capacitor,Run,5711	1
27	w0570609	Start Capacitor,5711	1
28	W0572709	BRACKET, SERVE SWITCH 5711	1
29	W0570059	BALLAST, 120-277V 50/60Hz	1
30	70426	TERM, 1/4F INS QD 18-22 GA	2
31	101124	Ring Eye, Red, #8	1
32	88031	SNAP BUSHING, HEYCO #2096	2

5711 Side Electrical Box

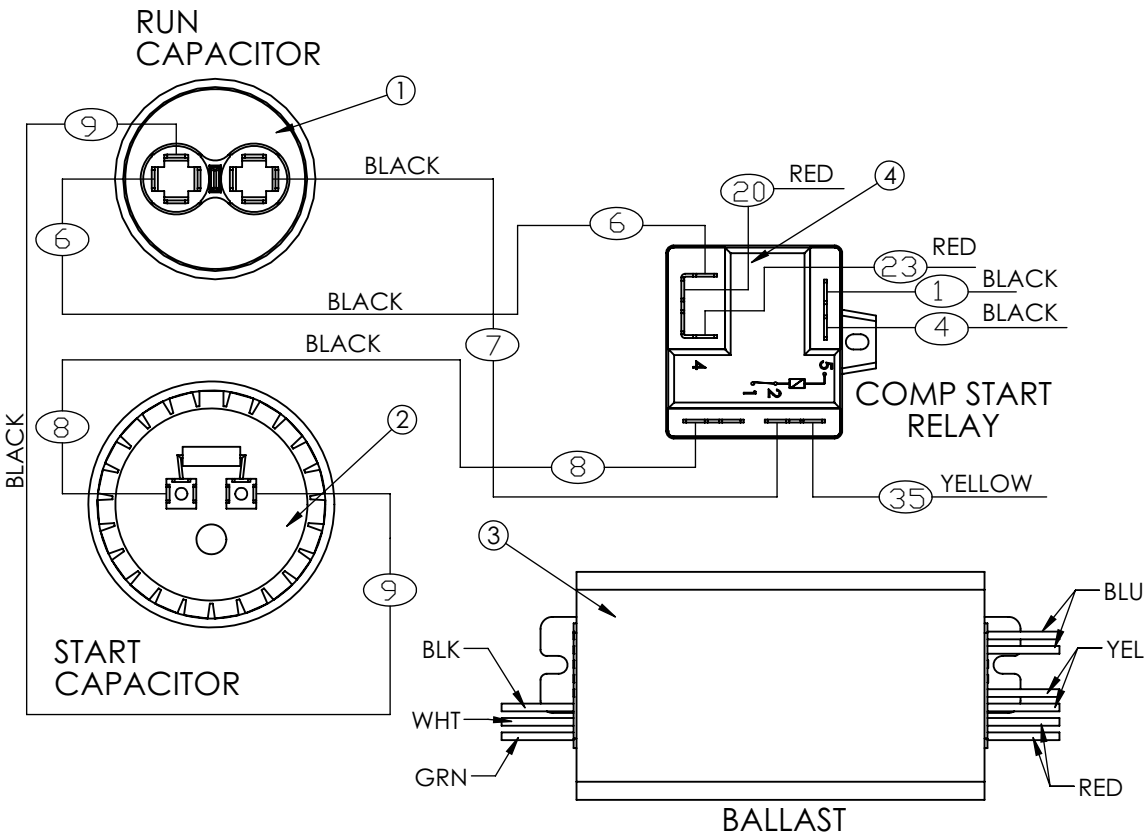

FILE NAME: W0572756.SLDDRW (SH7 5711 SIDE ELEC BOX)

ITEM NO.	QTY.	PART NUMBER	DESCRIPTION
1	1	W0570610	Capacitor,Run,5711
2	1	w0570609	Start Capacitor,5711
3	1	W0570059	BALLAST, 120-277V 50/60Hz
4	1	W0570611	Relay,Compressor,5711

5311 Spinner Hook-Up with Timer Wiring Diagram

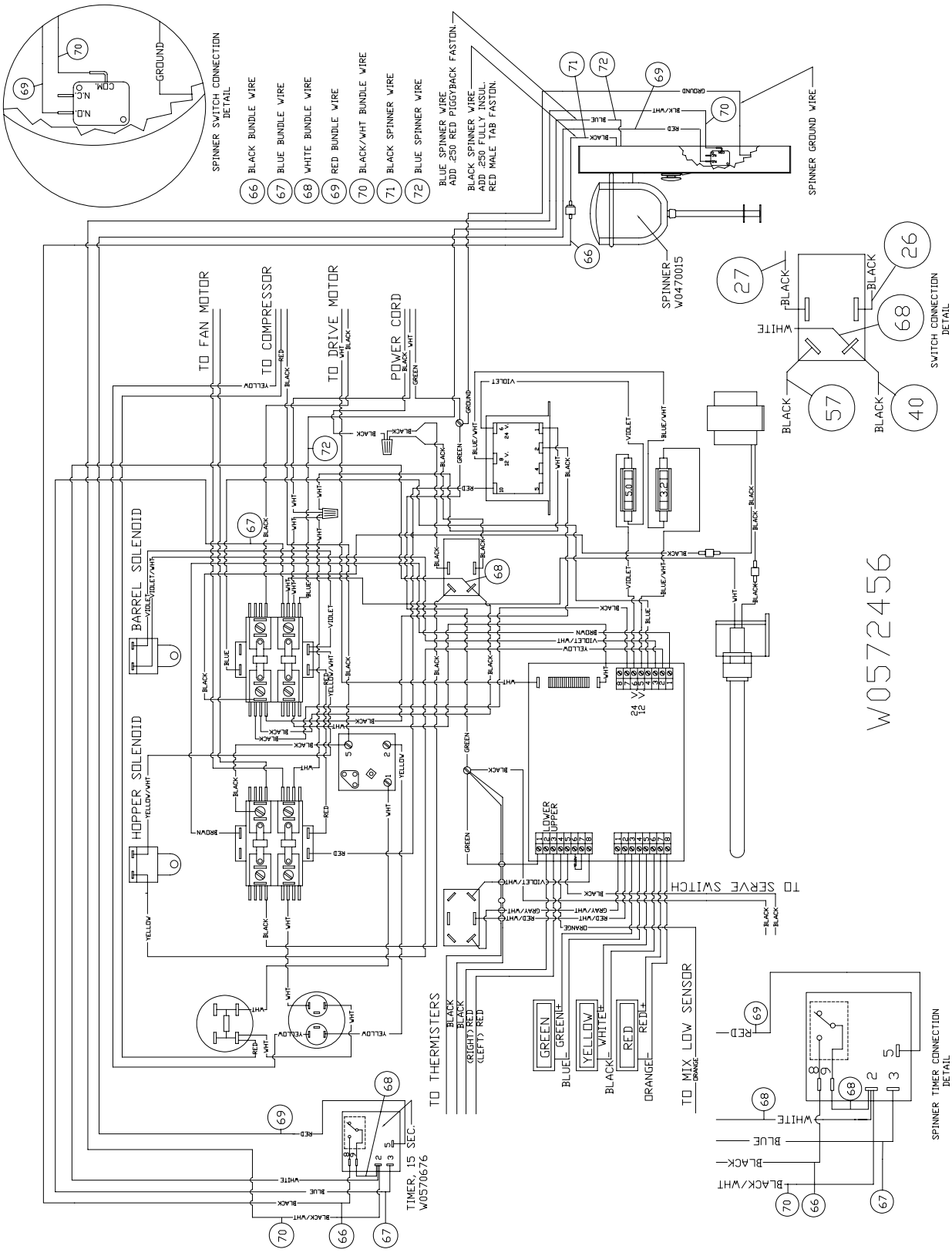

5511 Spinner without Timer Hook-Up Wiring Diagram

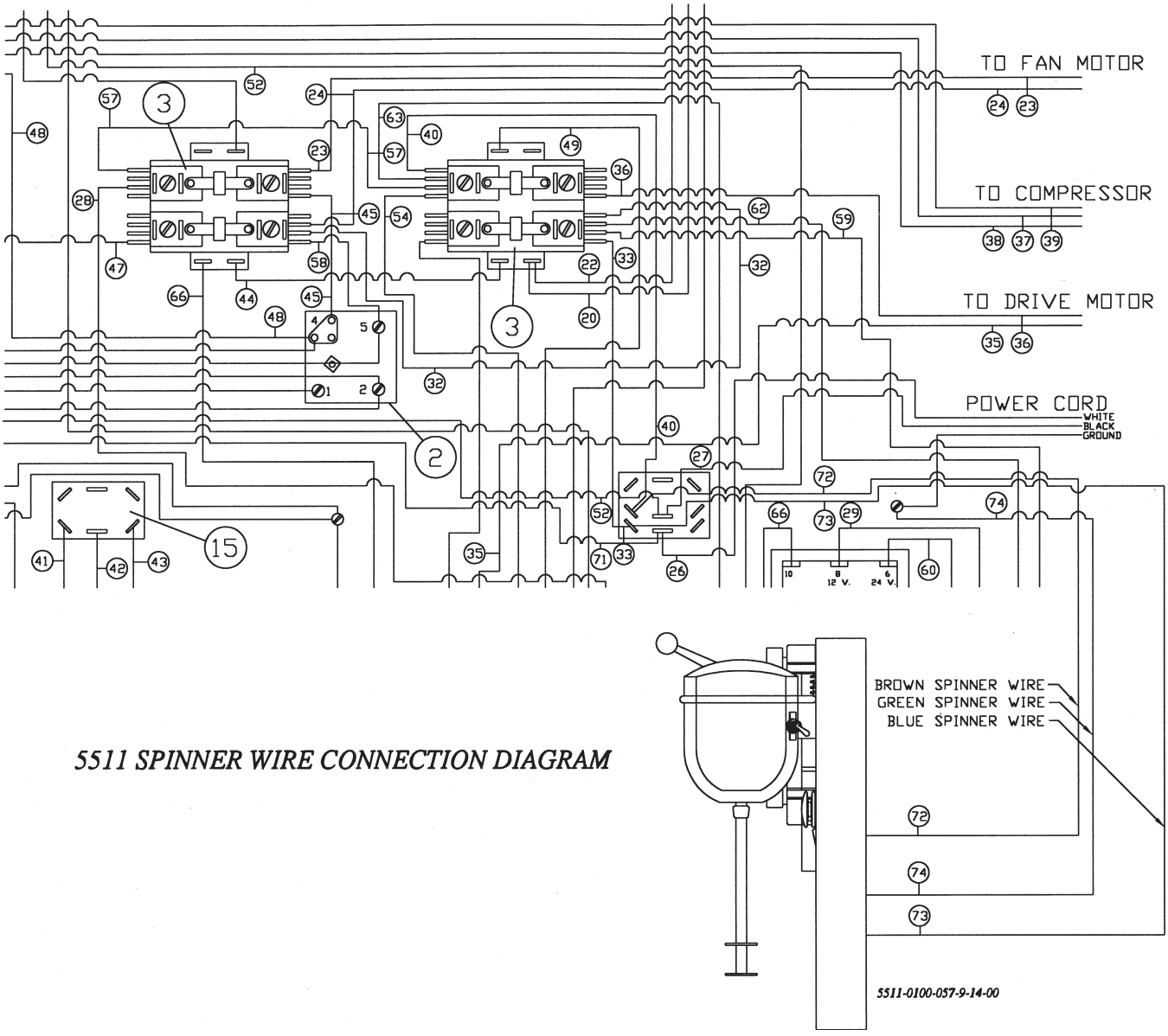

5511 SPINNER WIRE CONNECTION DIAGRAM

5511-0100-057-9-14-00

5711-A Spinner Hook-Up Wiring Diagram

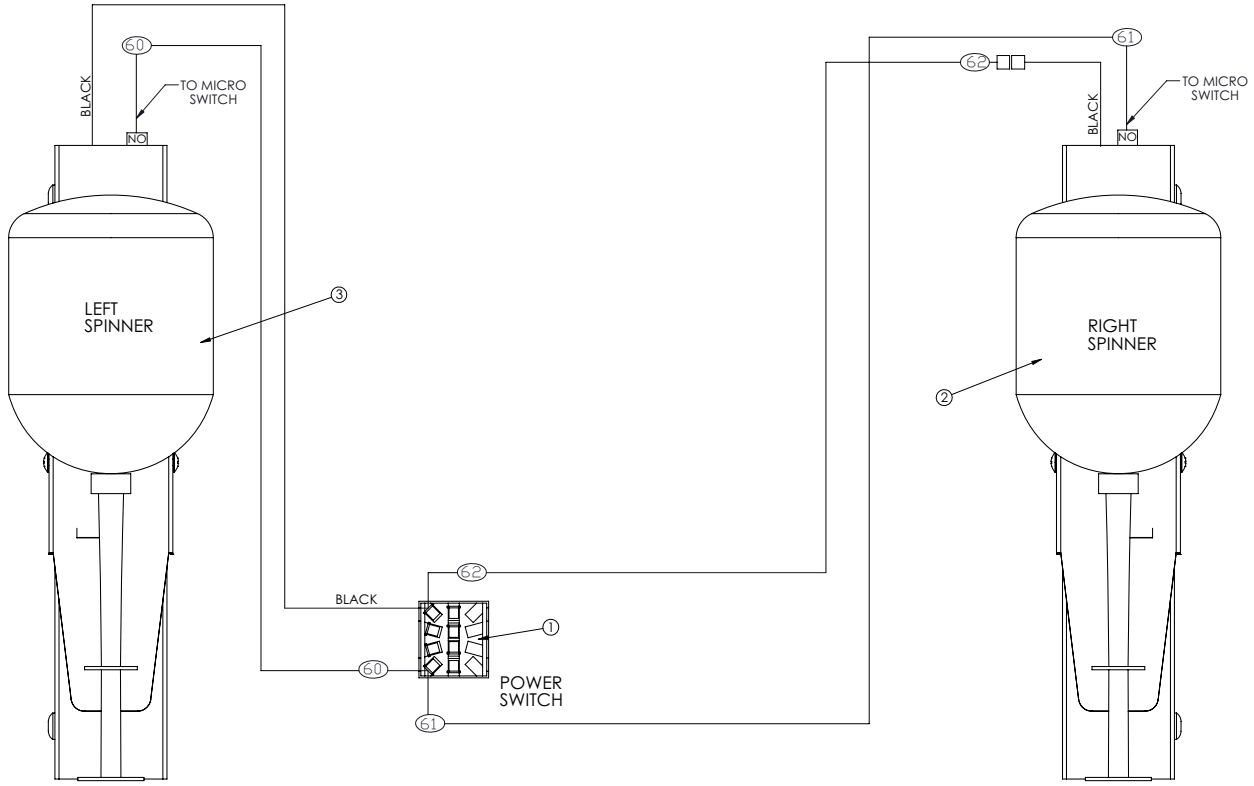

ITEM NO.	PART NUMBER	Title	QTY.
1	w0570943	On/Off Switch, 5711	1
2	W0471141-2	Mixer Assy, Sterling,230v,Right	1
3	W0471141-1	Mixer Assy, Sterling,230v, Left	1

5311 Compressor Wiring Diagram

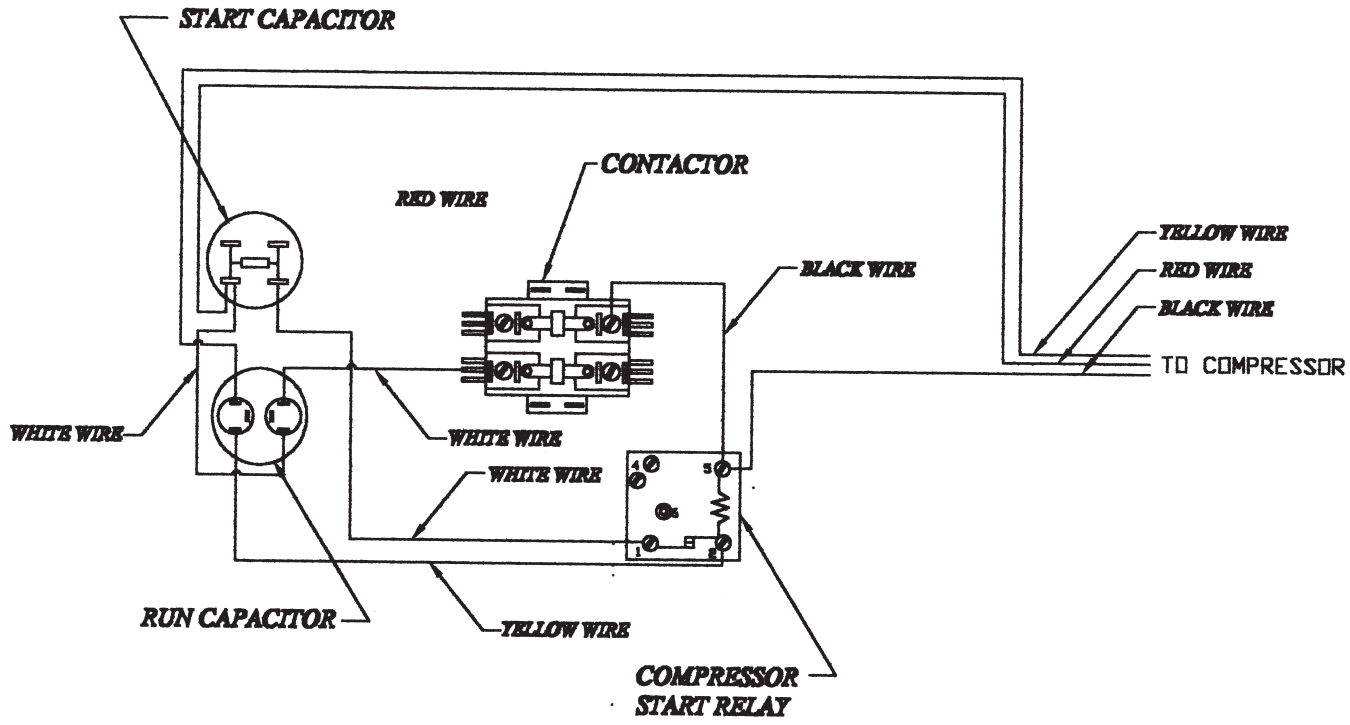

5511 Compressor Wiring Diagram

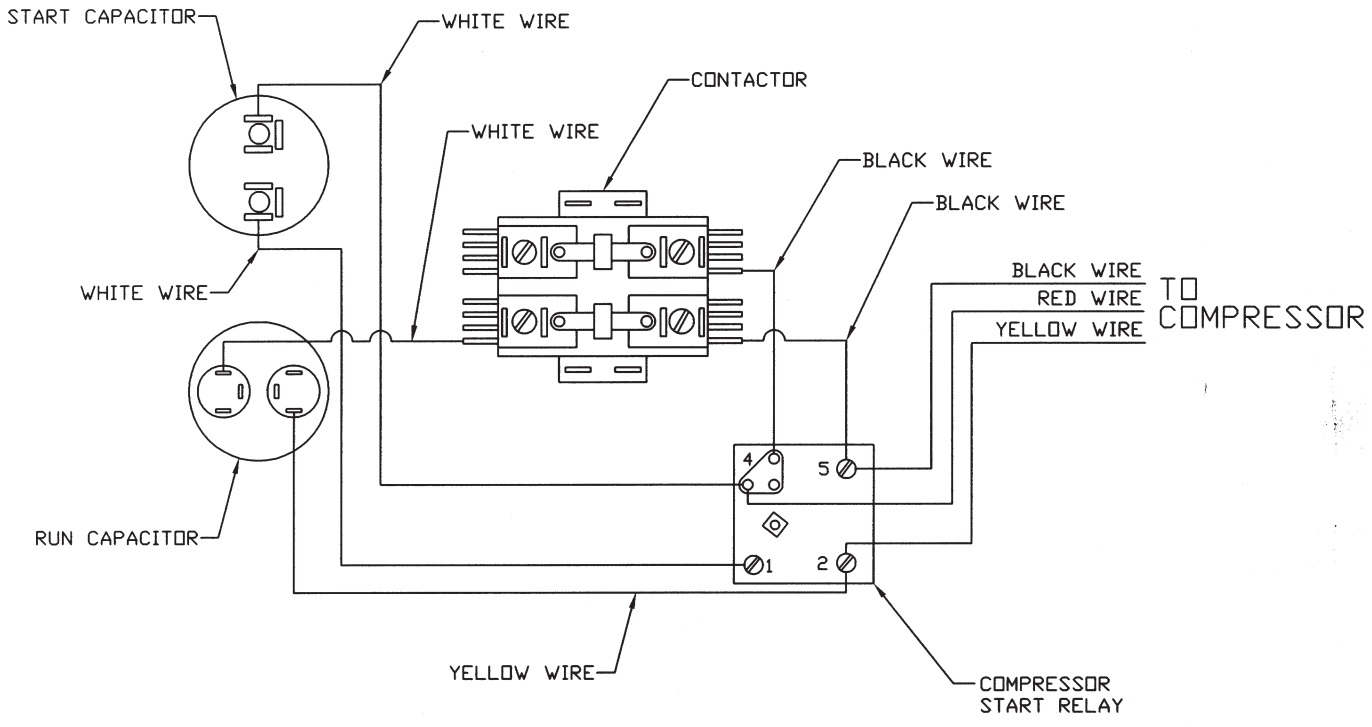

5711 Compressor Wiring Diagram

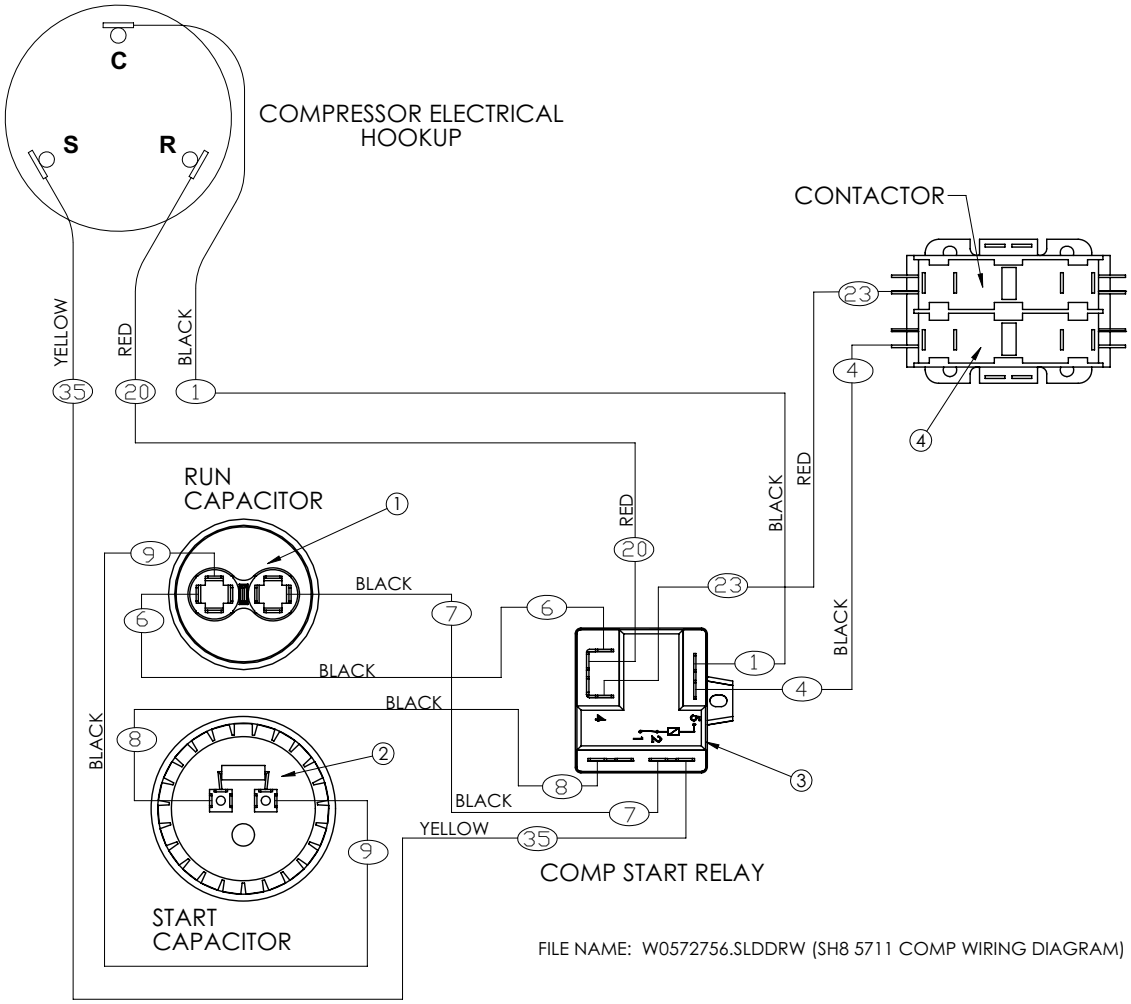

ITEM NO.	QTY.	PART NUMBER	DESCRIPTION
1	1	W0570610	Capacitor,Run,5711
2	1	w0570609	Start Capacitor,5711
3	1	W0570611	Relay,Compressor,5711
4	1	W0570655	Contactor, 24V Coil

5311 Ladder Diagram 115V 60 Hz

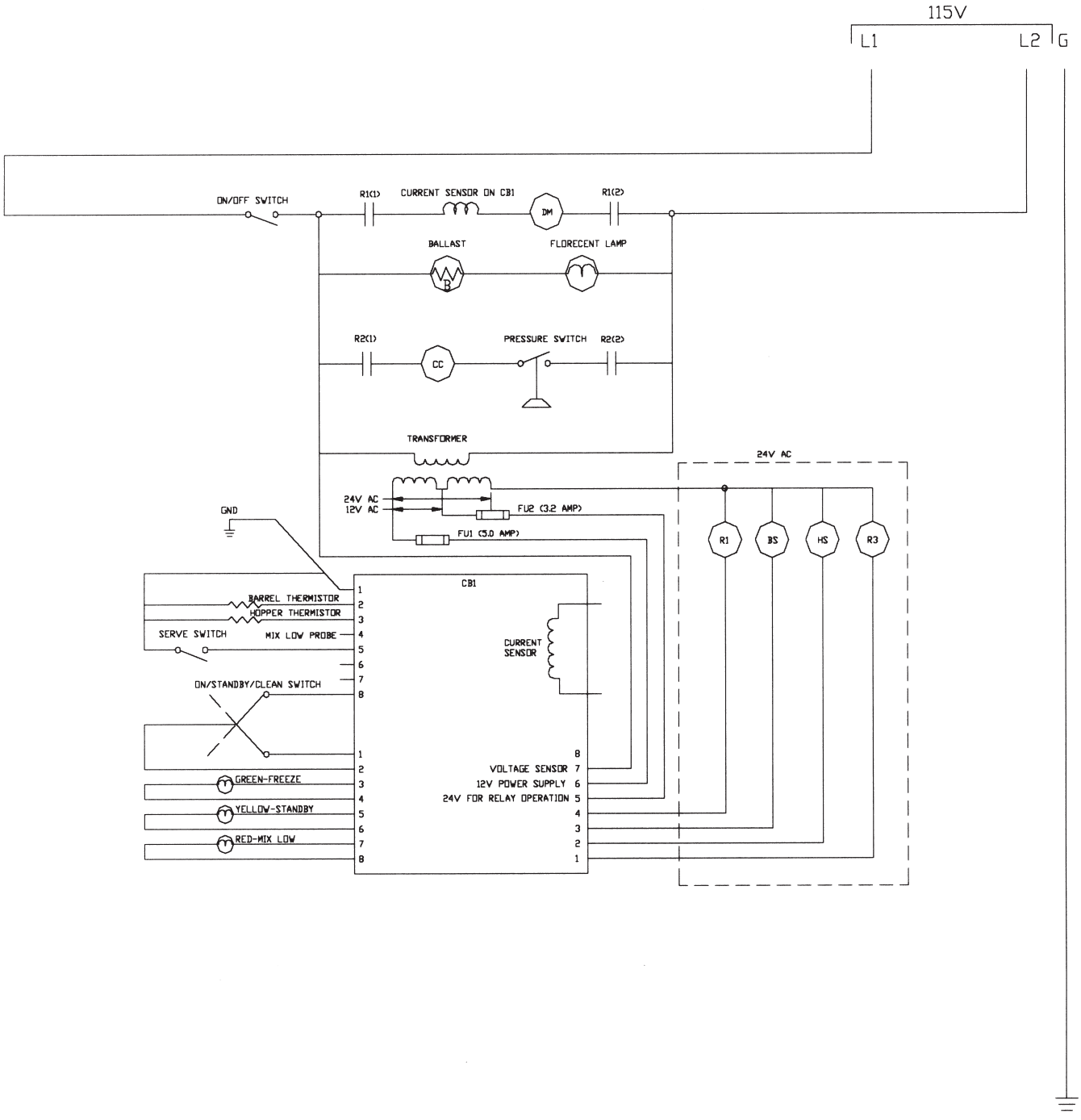

5511 Ladder Diagram 208/230V/50 Hz

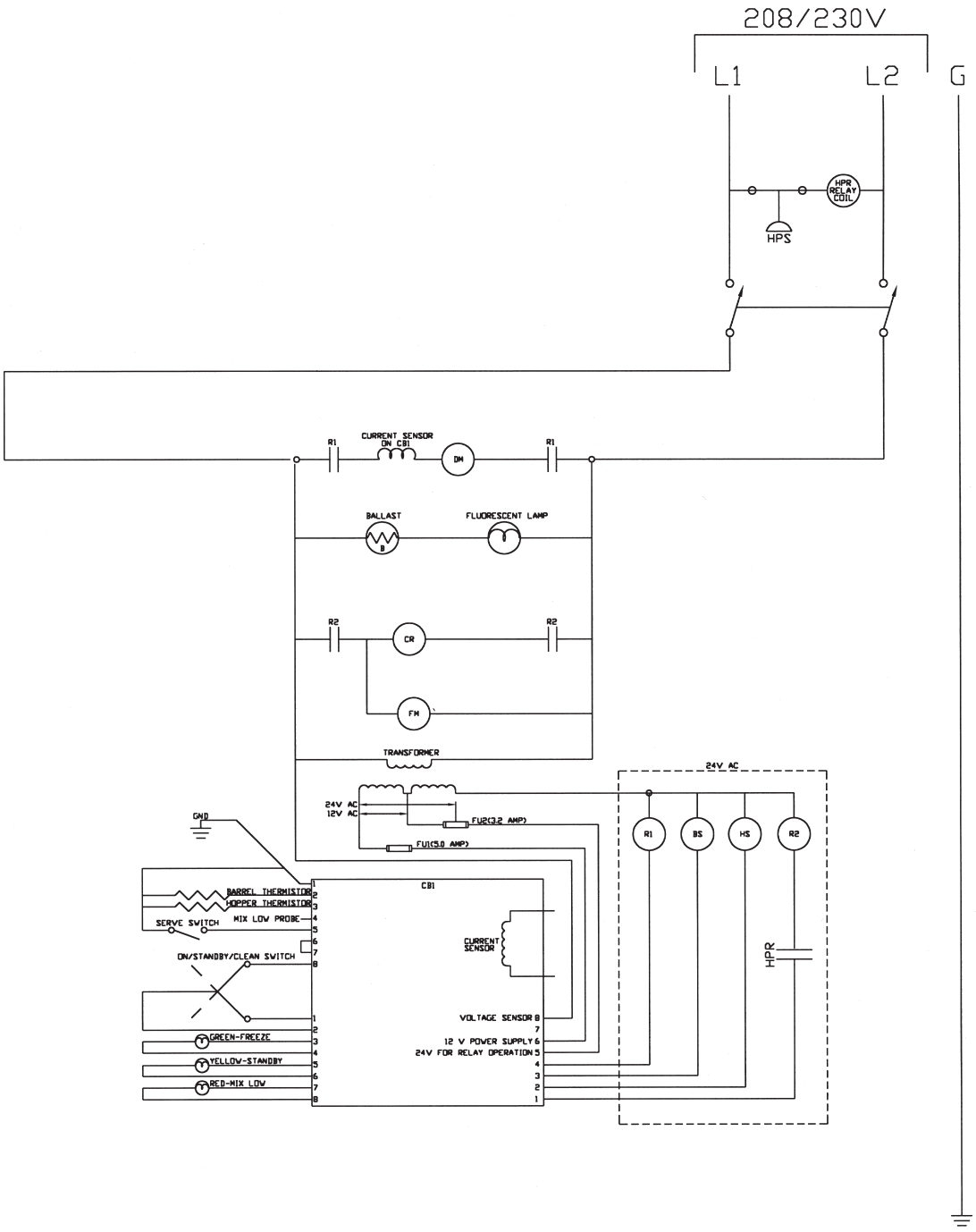

5511-0103-057-3-20-00

5941 Ladder Diagram 115V 60 Hz

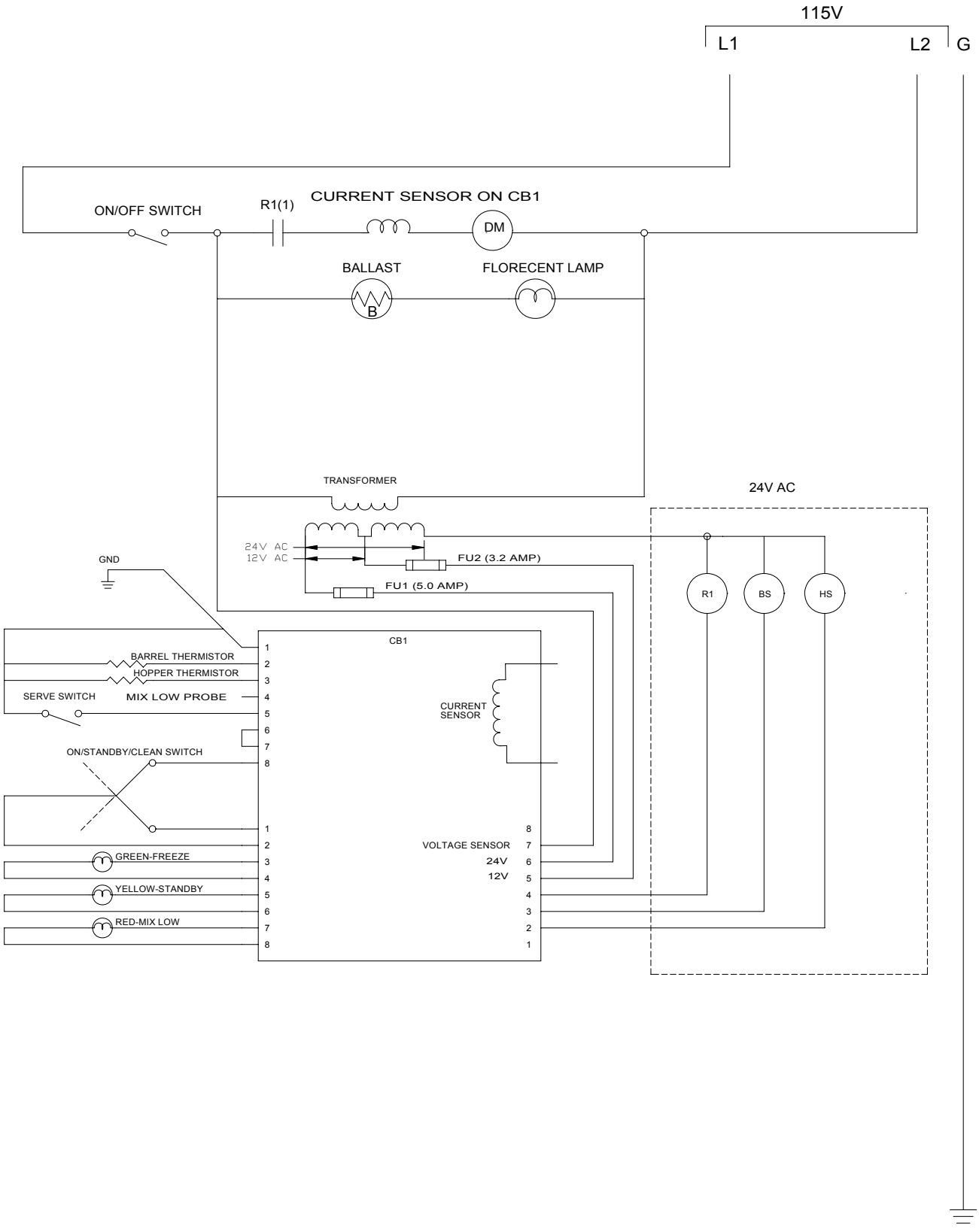

5711-B and -C Ladder Diagram

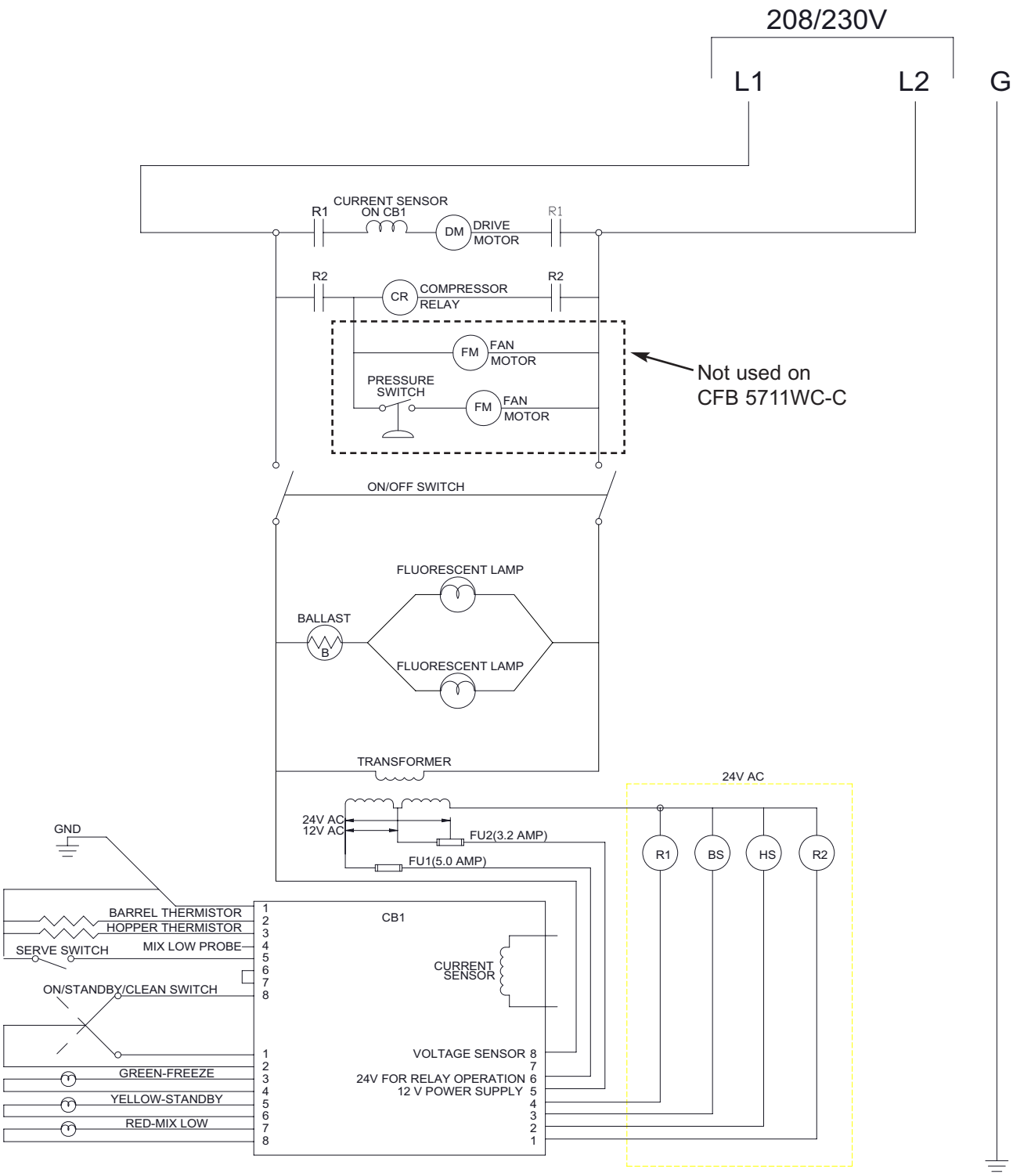

FILE NAME: W0572756.SLDDRW (SH9 5711 LADDER DIAGRAM)

5711-A Ladder Diagram (Spinners)

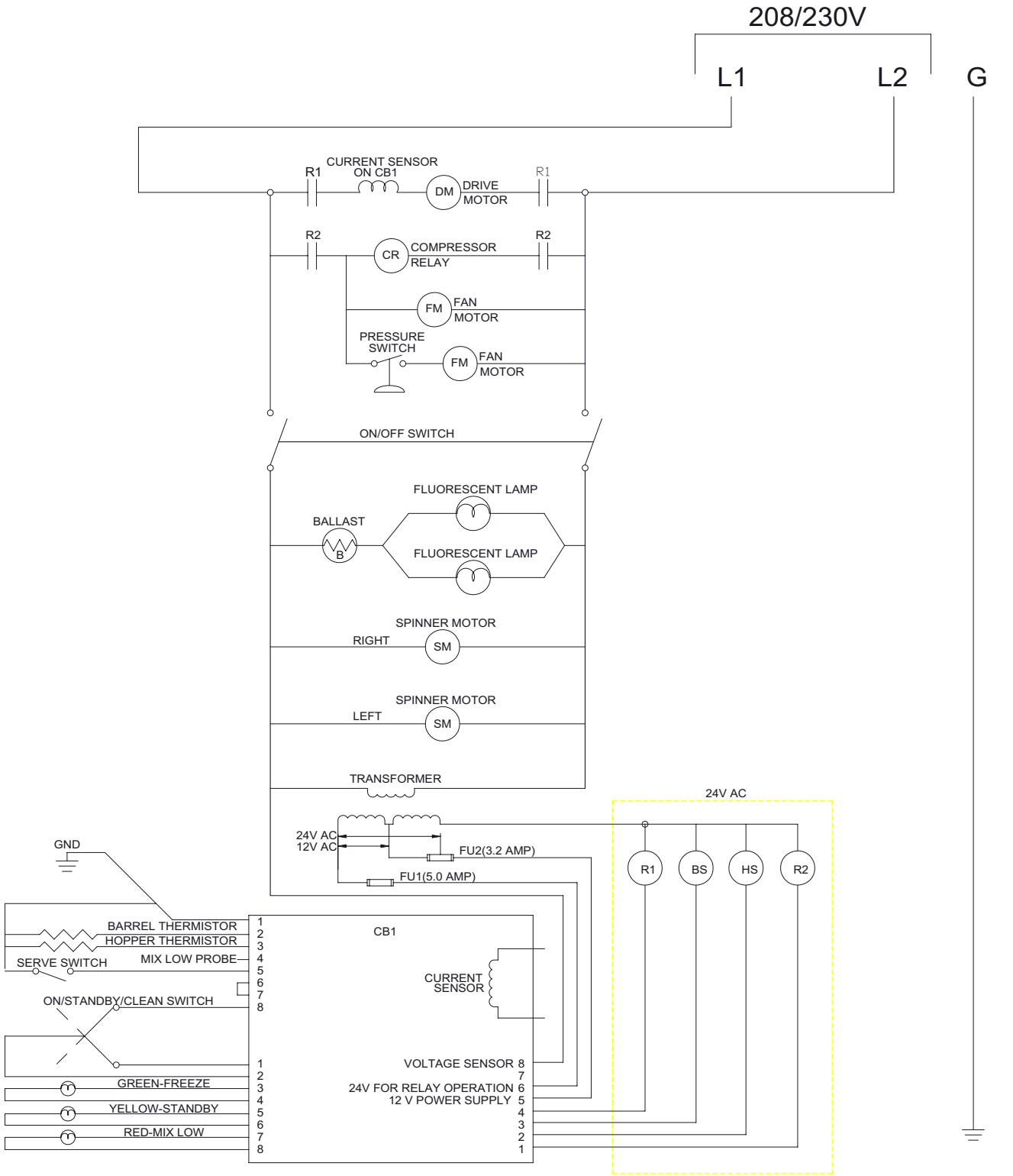

FILE NAME: W0572755.SLDDRW (SH6 5711 LADDER DIA (SPINNERS))

5311 Wiring Diagram

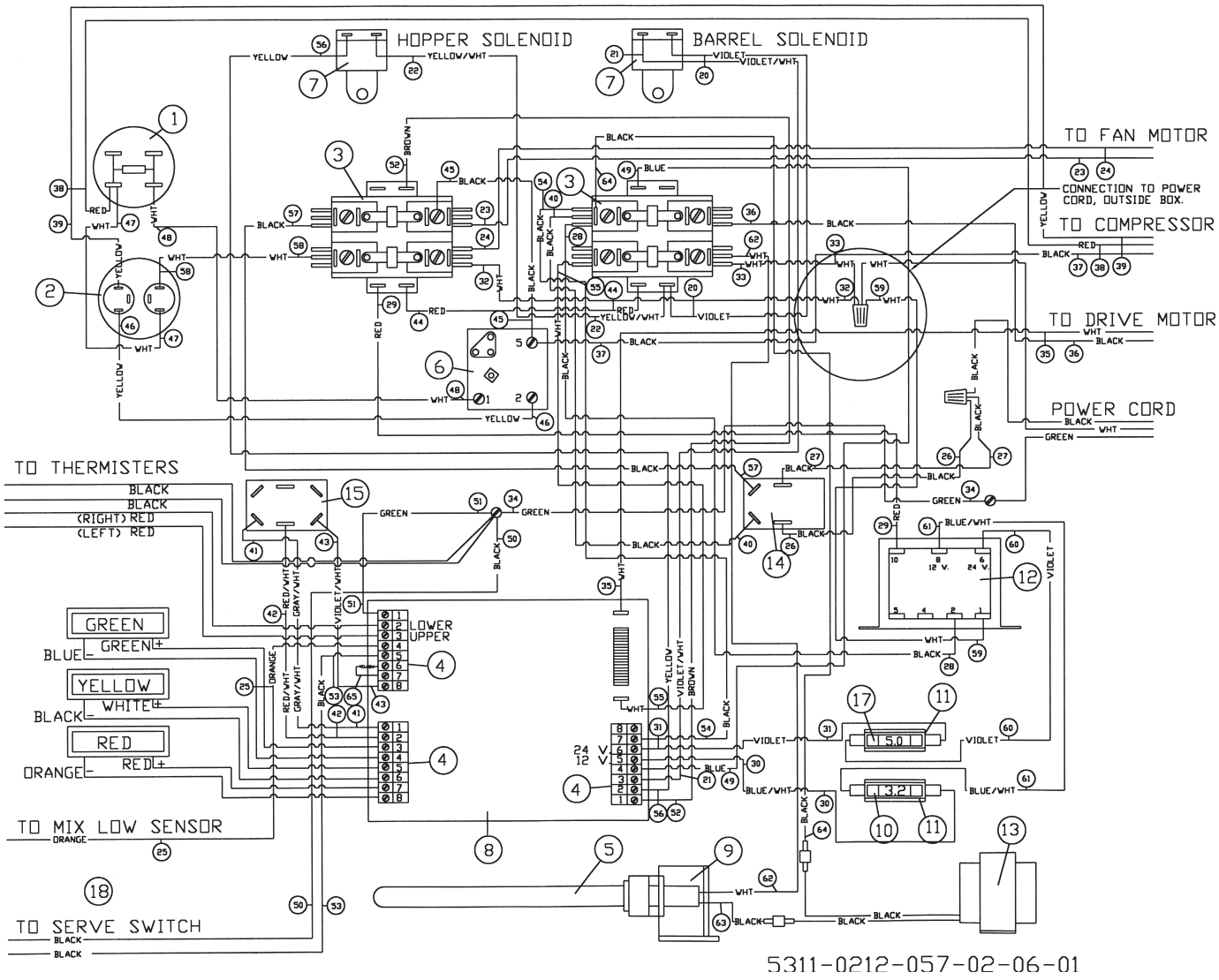

Item	Part Number	Description
1	W0570603	Start Capacitor
2	W0570617	Run Capacitor
3	W0570655	Contactor
4	W0570423	8 Pin Terminal Strip
5	W0570043	Bulb
6	W0570638	Compressor Relay
7	W1650004	Solenoid Coil
8	W0650913	Circuit Board
9	W0570044	Light Socket
10	W0570823	3.2 Amp Fuse
11	W1570616	Fuse Holder
12	W0570659	Transformer
13	W0570045	Ballast
14	W0570934	On/Off Switch
15	W1570901	Stand-By Switch
16	W1572132	6 Wire Cable Sub Assy.
17	W0570842	Fuse 5 Amp
18	W0570935	Switch (Serve)
19	W0572704	Bracket Serve Switch

5311-0212-057-02-06-01

5511 Wiring Diagram

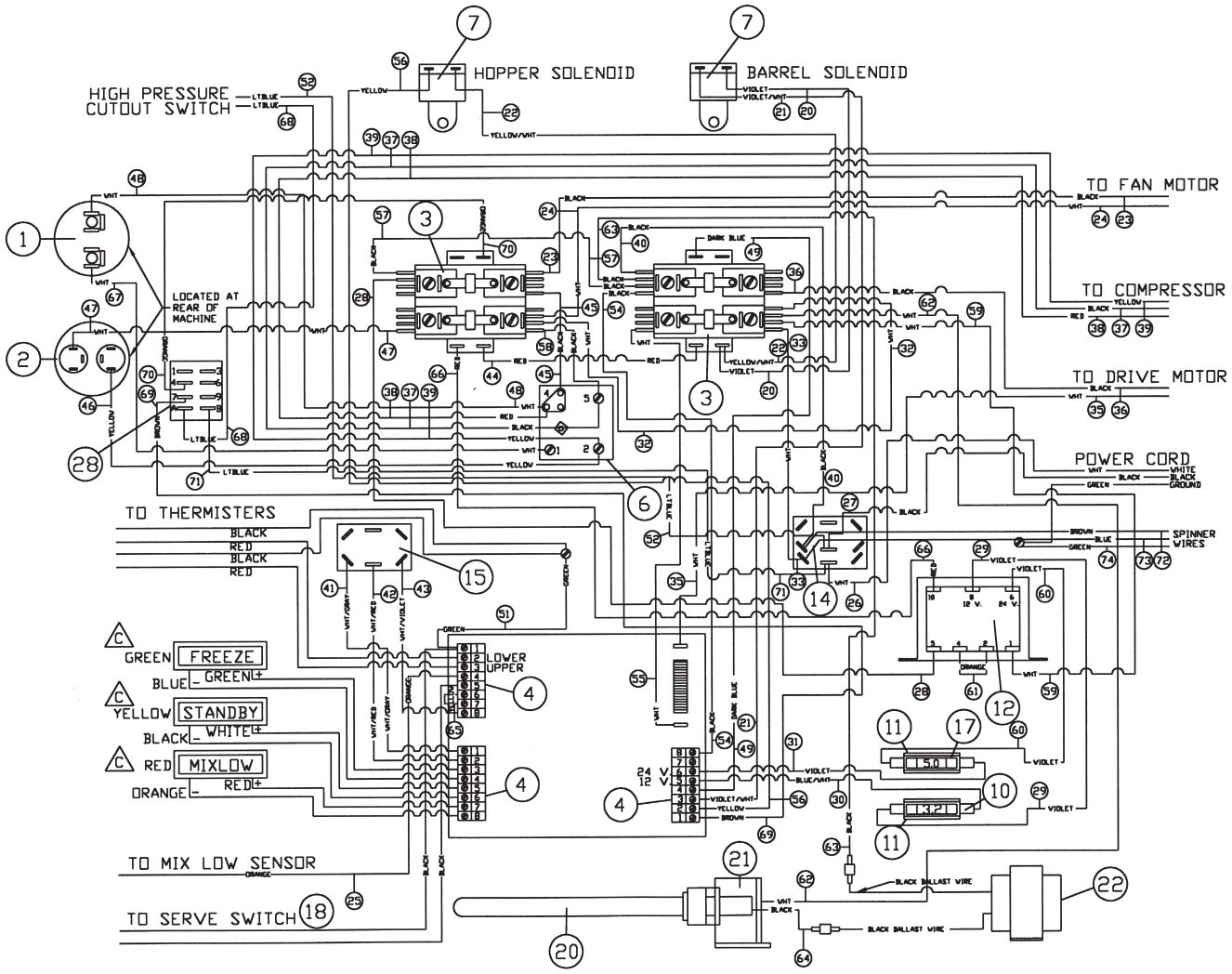

Item	Part Number	Description
1	W0570619	Start Capacitor
2	W0570617	Run Capacitor
3	W0570655	Contactor
4	W0570213	8 Pin Terminal Strip
6	W0570618	Compressor Relay
7	W0650102	Solenoid Complete
10	W0570823	3.2 Amp Fuse
11	W1570616	Fuse Holder
12	W0570659	Transformer
14	W0570912	On/Off Switch (Toggle)
15	W1570901	Mode Switch
16	W1572132	6 Wire Cable Sub-As
17	W0570842	Fuse 5 Amp
18	W0570916	Switch (Serve)
19	W0572704	Bracket Serve Switch
20	W0570043	Bulb
21	W0570044	Light Socket
22	W0570047	Ballast
*23	W0572500	Right Side Harness
*24	W0572501	Right Elec. Box Harness
*25	W0572502	Left Elec. Box Harness
*26	W0572503	Left Side Harness
*27	W0572504	Electrical Box Wire Bundle
28	83106	Relay, Pressure Switch

5511-0216-057-10-25-00

5941 Wiring Diagram

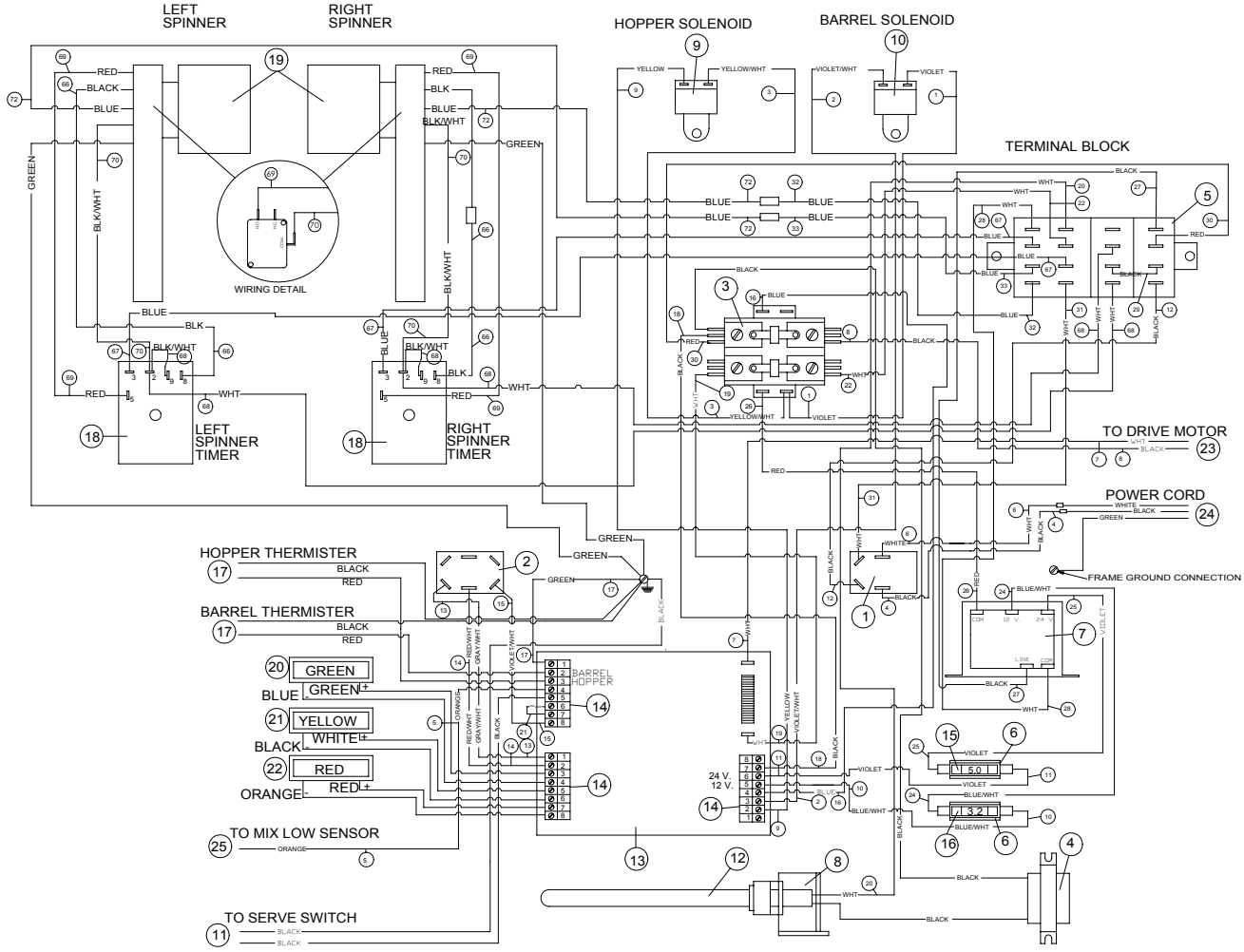

ITEM	QTY	PART NUMBER	DESCRIPTION
1	1	W0570934	ON/OFF SWITCH
2	1	W1570901	STAND-BY SWITCH
3	1	W0570655	CONTACTOR
4	1	W0570045	BALLAST
5	1	W0570235	TERMINAL BLOCK
6	2	W1570616	FUSE HOLDER
7	1	W0570659	TRANSFORMER
8	1	W0570044	LIGHT SOCKET
9	1	W1650002	SOLENOID COIL(HOPPER)
10	1	W1650005	SOLENOID COIL(BARREL)
11	1	W0570935	SWITCH (SERVE)
12	1	W0570043	BULB
13	1	W0650913	CIRCUIT BOARD
14	3	W0570423	8 PIN TERMINAL STRIP
15	1	W0570842	FUSE 5 AMP
16	1	W0570823	3.2 AMP FUSE
17	2	W0570504	THERMISTER
18	2	W0570676	15 SEC. TIMER
19	2	W0470015	SPINNER
20	1	W1570011	FREEZE LIGHT
21	1	W1570010	STAND BY LIGHT
22	1	W1570012	MIX LOW LIGHT
23	1	W0320019	DRIVE MOTOR
24	1	W0572068	POWER CORD
25	1	W0572362	MIX LOW PROBE

5711-B and -C Wiring Diagram

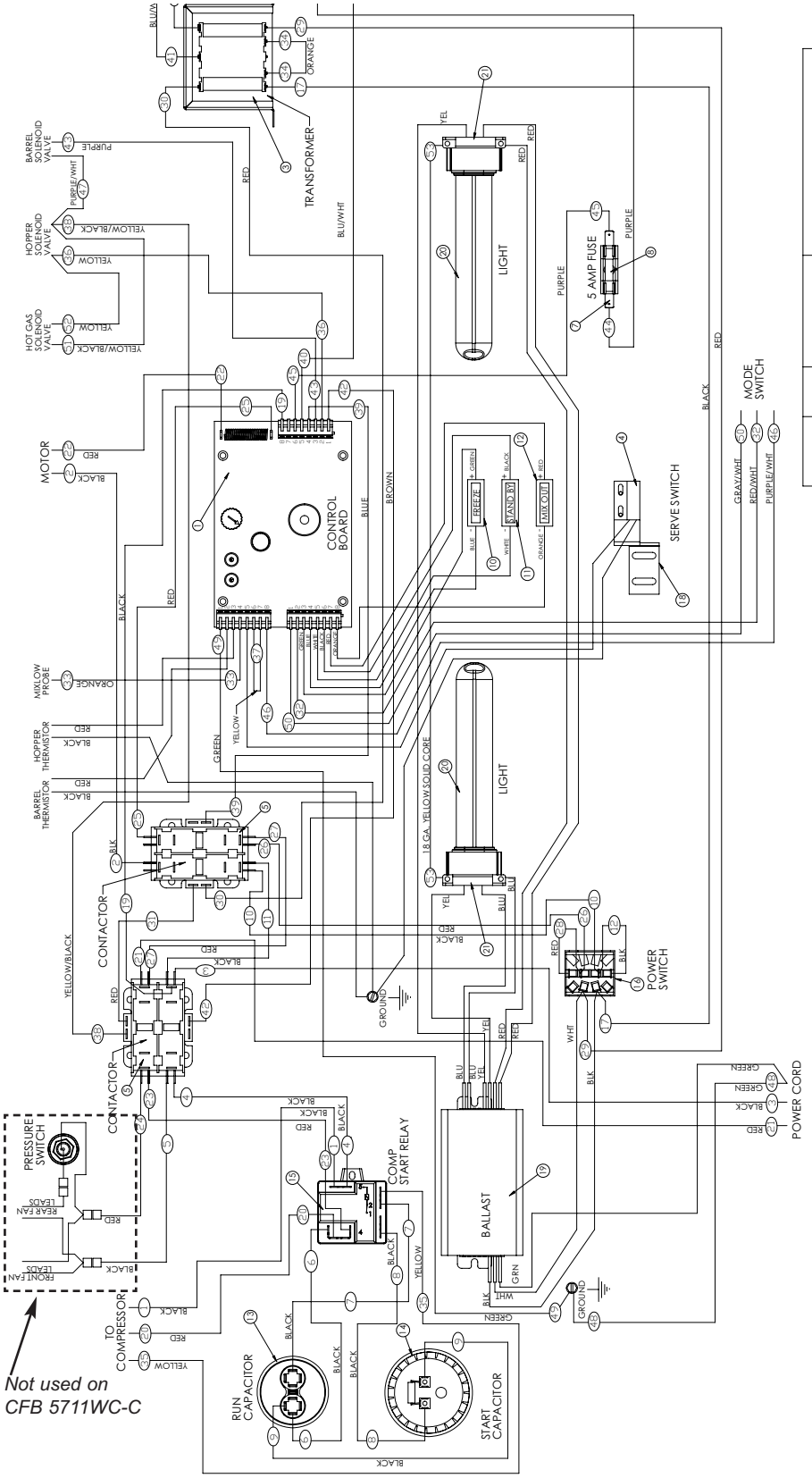

FILE NAME: W0572756.SLDDRW (SH10 5711 WIRING DIRAGRAM)

ITEM NO.	QTY.	PART NUMBER	DESCRIPTION
1	1	w0650913	Control Board
3	1	W0570659	Transformer
4	1	W0570916	Reed Switch, N.O.
5	2	W0570655	Contactor, 24V Coil
7	2	w1570616	Fuse Block, 1/4"
8	1	w0570842	5.0 Amp Fuse
9	1	w0570823	3.2 Amp Fuse
10	1	W15700012	LIGHT, INDICATOR GRN 12V LED
11	1	W15700010	LIGHT, INDICATOR DK AMBER 12V
12	1	W15700011	LIGHT, INDICATOR LT RED 12V
13	1	W0570610	Capacitor,Run,5711
14	1	w0570609	Start Capacitor,5711
15	1	W0570611	Relay,Compressor,5711
16	1	w0570943	On/Off Switch, 5711
17	1	W0620431	Switch,Pressure,5711
18	1	W0572709	BRACKET, SERVE SWITCH 5711
19	1	W0570059	BALLAST, 120-277V 50/60Hz
20	2	W0570050	BULB, 4-PIN FLUORESCENT
21	2	W0570049	SOCKET, 4-PIN FLUORESCENT

5711-A Wiring Diagram (Spinners)

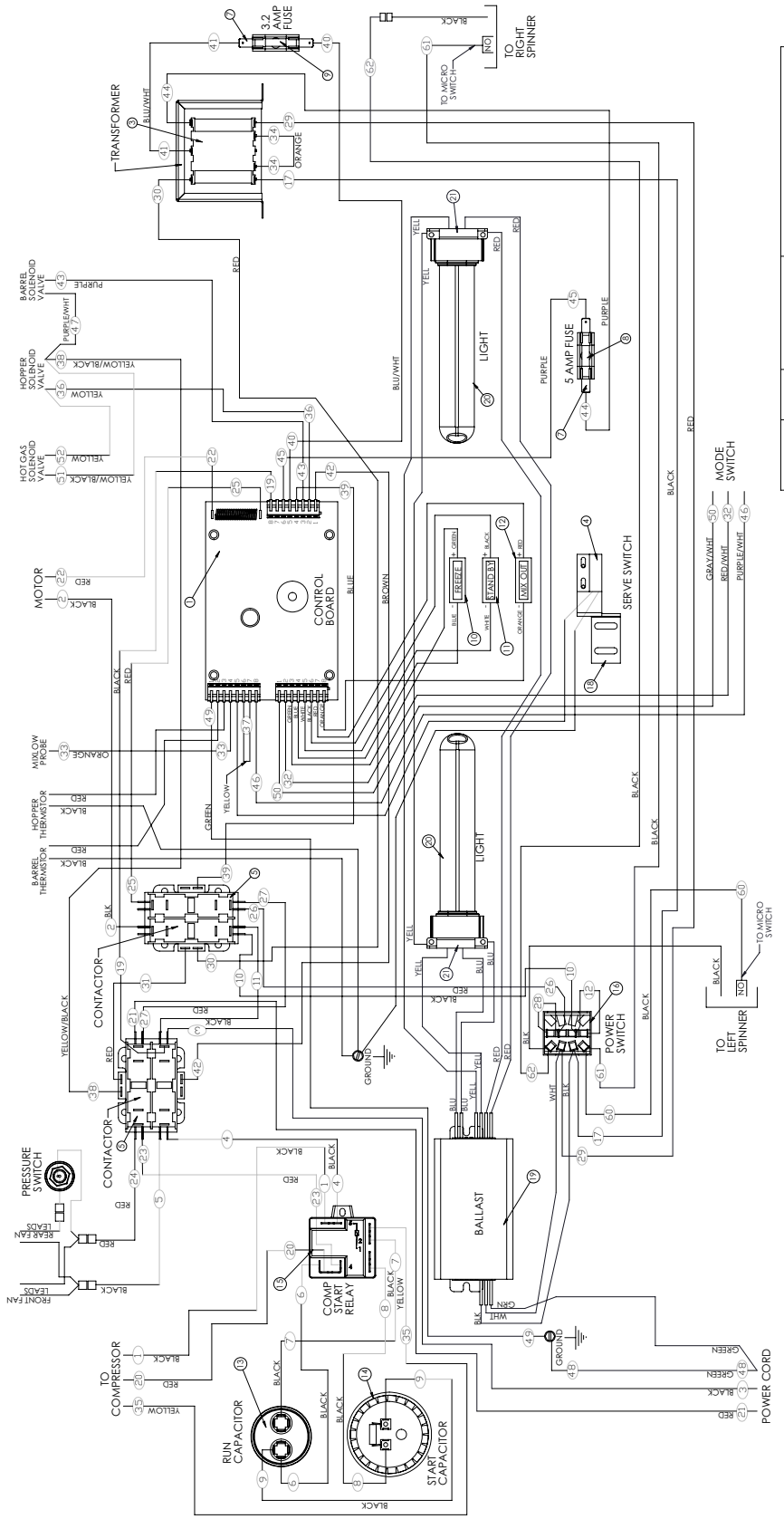

ITEM NO.	QTY.	PART NUMBER	DESCRIPTION
1	1	w0650913	Control Board
3	1	W0570659	Transformer
4	1	W0570916	Reed Switch, N.O.
5	2	W0570655	Contactor, 24V Coil
7	2	w15706l6	Fuse Block, 1/4"
8	1	w0570842	5.0 Amp Fuse
9	1	w0570823	3.2 Amp Fuse
10	1	W1570012	LIGHT, INDICATOR GRN 12V LED
11	1	W1570010	LIGHT, INDICATOR DK AMBER 12V
12	1	W1570011	LIGHT, INDICATOR LT RED 12V
13	1	W0570610	Capacitor,Run,5711
14	1	w0570609	Start Capacitor,5711
15	1	W0570611	Relay,Compressor,5711
16	1	w0570943	On/Off Switch, 5711
17	1	W0620431	Switch,Pressure,5711
18	1	W0572709	BRACKET, SERVE SWITCH 5711
19	1	W0570059	BALLAST, 120-277V 50/60Hz
20	2	W0570050	BULB, 4-PIN FLUORESCENT
21	2	W0570049	SOCKET, 4-PIN FLUORESCENT

FILE NAME: W0572755.SLDDRW (SH7 5711 WIRING DIA (SPINNERS))

Refrigeration Circuit

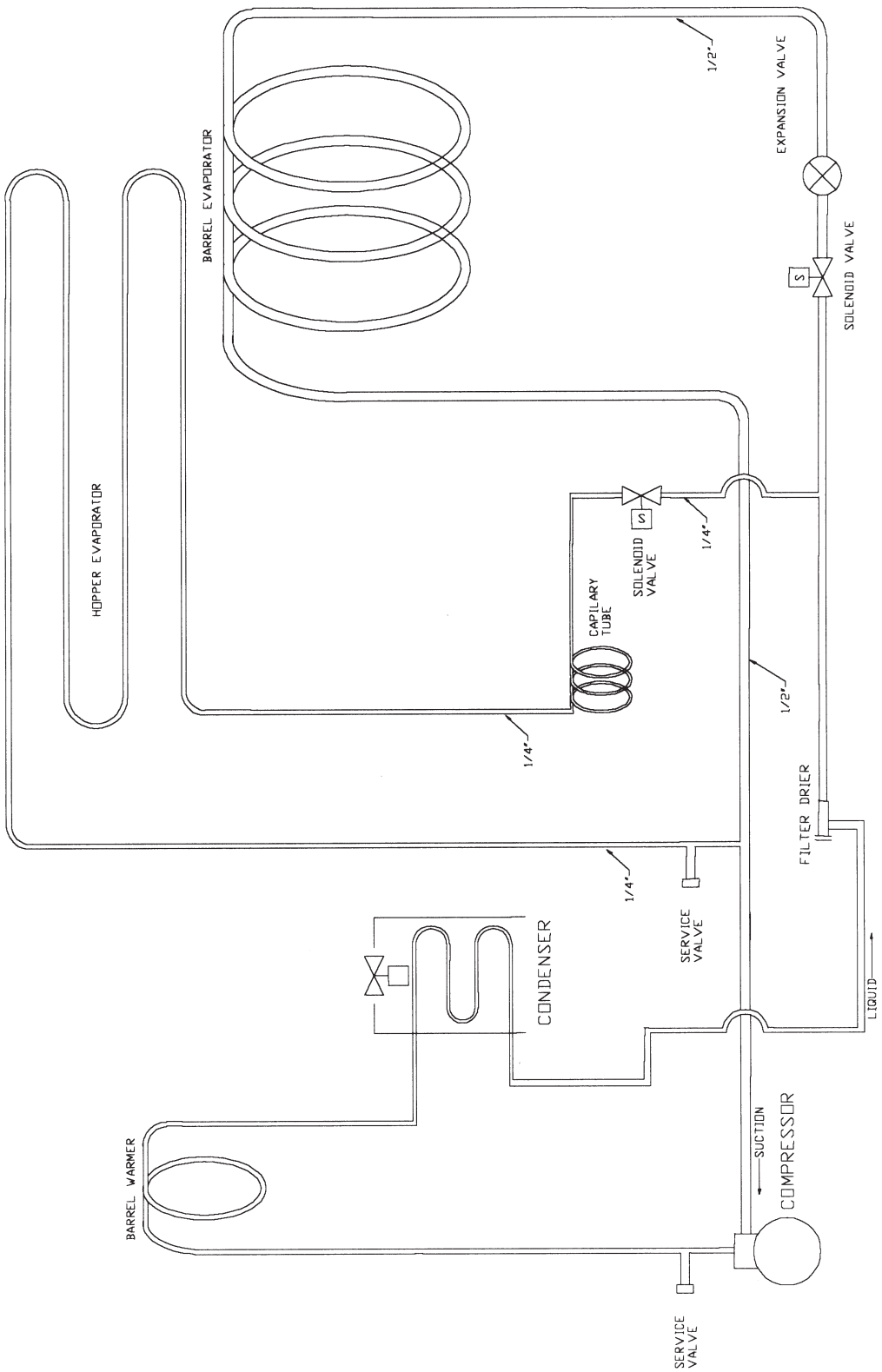

5941 Refrigeration Circuit

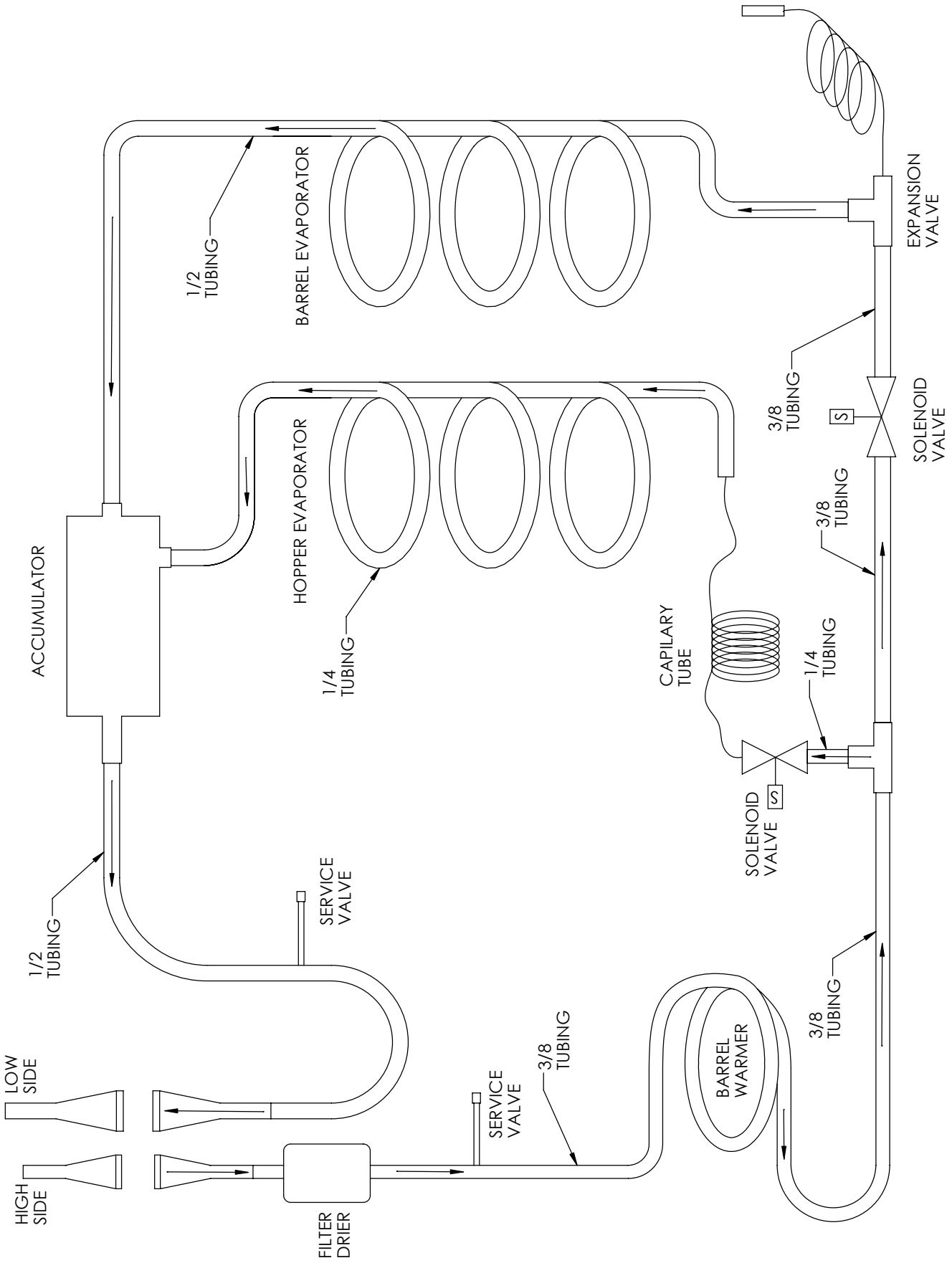

Tel (502) 425-4776 • Fax (502) 425-4664 • 1-800-695-4500 (USA & Canada only)
4003 Collins Lane • Louisville, KY 40245 • USA
www.gmcw.com • email: info@gmcw.com